PCXZ
Fuel Control Systems

Installation Guide

1106 Great Falls Court, Suite G
Knightdale, NC 27545
Phone 919 266-4442 • Fax 919 266-4588
www.pie-corp.com

© Copyright 2005
Progressive International Electronics

PCXZ Fuel Control Systems
Installation Guide
CONTENTS

PCXZ

HISTORY OF DOCUMENTATION CHANGES & REVISIONS

Version 1.0 — June 1997
Version 1.1 — October 1997 (preliminary release)
Version 2.0 — January 1999
Version 3.0 — November 1999
Version 4.0 — July 2001
Version 4.1 — February 2004
- Added Kraus software levels
- Deleted Gasboy
- Added Tatsuno
- Added Nuovo Pignone

Version 4.2 — April 2005
- Added missing document

PURPOSE OF THIS DOCUMENT

This manual contains instructions for installation of the PCXZ Fuel Control System to electronic fuel dispenser computers and to peripheral equipment such as the point of sale terminal (POS).

Instructions for installing or servicing electronic fuel dispensers and POS terminals are not included. For more detail on any product not manufactured by PIE, or for PIE's own distribution box, always refer to that product's accompanying documentation.

NOTICE

Progressive International Electronics reserves the right to revise and improve this document as required. This publication details our Fuel Control Systems at this time, and may not accurately describe these products at all times in the future. Specifications are subject to change without notice.

PATENTS

Progressive International Products are manufactured or sold under one or more of the following U.S. patents.

5,790,410	5,663,887	5,361,216
5,831,861	5,557,529	5,270,943
5,694,326	5,394,336	5,108,742

COPYRIGHT

Copyright © 2004 Progressive International Electronics, Inc. All rights reserved. No part of this publication may be reproduced, stored in a retrieval system or transmitted, in any form or by any means, electronic, mechanical, photocopying, recording, or otherwise, without the prior written permission of Progressive International Electronics, Inc.

All brands or product names are trademarks or registered trademarks of their respective companies.

PCXZ
WARRANTY

Progressive International Electronics, Inc. (PIE) warrants to the Purchaser of the PCC fuel control equipment manufactured by PIE against defects in material or workmanship for 1 (one) year from date of shipment. Seller will replace or repair defective parts or issue credits to the Purchaser's account in accordance with the following Conditions of Warranty.

Conditions of Warranty

- Credit will be applied only when defective parts are received and inspected. An Return Merchandise Authorization (RMA) number must be obtained before returning defective goods to PIE.
- Decisions to repair or replace defective equipment are solely at the discretion of PIE.
- When parts shipments are made prior to receiving required warranty request and defective parts, they will be billed to the Purchaser.
- In all cases, approved warranty requests will be expedited by issuing the appropriate credit to the Purchaser's account or shipping replacement parts.
- Credits will not be issued for parts and no cash refunds for warranty credits will be made.
- All components and parts must be returned to the factory prepaid and, in turn, replacement components and parts will be returned prepaid by the factory.
- PIE's warranty applies only if the equipment has been installed and used in accordance with PIE's instructions. Warranty is void if any unauthorized alteration or addition has been made to the equipment or if it has been subject to damage caused by abuse, act of nature, misapplication, accident or improper operation.
- PIE's liability for any damages, including contribution and indemnification, arising out of or in any way connected with the supplying of the equipment or its use, shall not in any case exceed the cost of repair of the equipment as herein provided. Upon expiration of the warranty, all such liability, as well as any other liability, shall terminate.
- Nothing contained herein shall make the Purchaser, its agents or employees, an agent or representative of PIE, and PIE assumes no responsibility of any act, omission, representation or warranty by the Purchaser or anyone else except as expressly stated herein.
- The final decision as to the validity of any claims arising under the warranty shall be determined solely by PIE.

The foregoing warranty is in lieu of all other warranties, expressed or implied, including, but not limited to, the implied warranties of merchantability and fitness for a particular purpose which exceed the aforesaid obligations and are hereby disclaimed and excluded by Progressive International Electronics.

PCXZ

EXPLANATION OF DOCUMENT STANDARDS

The following documentation standards are applied throughout this document.

/ Comments are noted in ***italics***.

X Variable data formats are represented by X(s).

Electrical hazards and other warnings are indicated with this caution sign.

These abbreviations are used.

DBox	Distribution box — either dispenser manufacturer's or Progressive International Electronics'
MPD	Multiple product dispenser
PC	Personal computer
PCXZ	PIE's Fuel Control System (referred to as PIE Product in diagrams)
PIE	Progressive International Electronics, Inc.
POS	Point of sale terminal
SPD	Single product dispenser

NOTES PERTAINING TO INSTALLATION SITE

System Installation

System Installation Warnings

Safety hazards are inherent with all electrical equipment. Standard precautions must be taken at all times during installation and operation of the PCXZ systems. In addition to normal electrical precautions, the following points should be noted during installation.

- Installation must comply with National Electrical Code, as well as Federal, State/Provincial, Local, and all applicable codes.
- High voltages are present in the PCXZ components, as well as the equipment to which it is attaching. To prevent personal injury or equipment damage, disconnect all power before proceeding with installation.
- PCXZ equipment must be installed in nonvolatile, noncombustible, nonexplosive areas. The main box must be protected from severe vibration, extreme temperatures and excessive humidity.
- All PCXZ peripheral equipment must be installed in nonhazardous locations and must be UL-listed, using standard RS232 communication.

For Use in USA

Installation of the PCXZ fuel control system must comply with the requirements of the National Electrical Code (NFPA 70), the Automotive and Marine Station Code (NFPA 30A), and all Federal, State, Local, and applicable safety codes.

For Use in Canada

Installation of the PCXZ fuel control system must comply with the requirements of the Canadian Electrical Code, the Flammable and Combustible Liquid Code, and all Federal, Provincial, State, Local, and applicable safety codes.

The installation of the systems covered by this manual in conjunction with equipment not UL Listed has not been evaluated by the Underwriters Laboratories and is outside the intended use of this equipment. Warning: All dispensing equipment discussed in this manual is not UL Listed and the combination has not been evaluated by Underwriters Laboratories.

System Installation

System Evaluation

IMPORTANT!

Before determining what PCXZ components are to be purchased, and prior to the installation of any equipment, it is essential that the fuel dispensing system be thoroughly evaluated. A site survey should be completed, listing all the fuel dispensing related equipment.

The survey should include:

- Model numbers of both dispenser and DBox
- Manufacturer of equipment
- Number of dispensers
- A simple drawing describing the station layout

After your site survey is complete, Progressive International's sales staff and technicians will be available to assist you in determining which product(s) are appropriate for a particular fuel dispensing application.

System Installation Checklist

The fuel dispensing system should be installed in the following order.

1. Install dispensers according to manufacturer's specifications. ***See System Installation Requirements on following page.***
2. Test dispensers with same brand console. ***See System Installation Requirements on following page.***
3. Mount PCXZ. ***Refer to PCXZ Installation section of this manual.***
4. Connect system components to specific dispenser box (DBox). ***If DBox is supplied by dispenser manufacturer, see Dispenser & Reader Specific Installation section of this manual. If DBox is supplied by PIE, see PIE DBox Installation Guide.***
5. Test with PCC Demo Test Program. ***Refer to Diagnostics section of this manual.***
6. Install POS application and test fully integrated system.

To ensure smooth system integration, it is recommended that the petroleum equipment service technician for the account be available to resolve dispenser-related issues.

System Installation

System Installation Requirements

In preparation for the PCXZ installation, ensure that the following requirements have been met.

1. Following the manufacturer's installation instructions, install the dispensing equipment (pumps and data distribution boxes).

2. Test all dispensers in stand-alone (manual) mode.

3. Test all dispensers with same brand console to check basic dispenser functionality and confirm a working communications link between the DBox and the dispensers. On dispensers which have programmable identification numbers, ensure that the numbers are set correctly. If multiple dispensers contain the same i.d. number, communication conflicts will occur.

All dispensers and communications should be functioning properly before proceeding with PCXZ installation. If not, refer questions to the dispenser vendor/manufacturer.

Description of PCXZ Equipment

PCXZ systems are made up of the components listed below. Using this checklist, identify and familiarize yourself with each of the components in your shipment. ***For further clarification, refer to the block diagrams at the end of each dispenser section in the Dispenser & Reader Specific Installation portion of this manual.***

PCXZ Equipment Checklist

- ✔ PCXZ Main Box — ***with connectors for POS, diagnostics and configurator box***
- ✔ Configurator Box(es) — ***as many as 2 boxes which adapt the PCXZ to the appropriate brand(s) of fuel dispenser; wall transformer attached***
- ✔ Dispenser Connection Cable — ***standard 3-foot cable which connects the configurator box to the fuel dispenser distribution box***
- ✔ Config Cable — ***cable which connects the PCXZ board to the configurator box***
- ✔ Installation Manual
- ✔ System/Test Diskette

System Installation

PCXZ Installation

Read entire installation manual before attempting to install the system. Note warnings on previous page.

1. A junction box must be provided which has only enough receptacle outlets to accommodate the transformers of the PCXZ system. ***See PCXZ Power Requirements listed below.***

> PCXZ Power Requirements
>
> The PCXZ and the configurator box must be powered from a dedicated 115 VAC single circuit breaker, with no other devices connected to wire or breaker. Do not use a switched neutral breaker. The neutral must come directly from the neutral bus in the electric supply panel. No other neutral circuits may be connected to this wire.
>
> The electric supply system earth bond must connect to a driven ground rod or other earth bonding systems that comply with the National Electrical Code, Article 250.
>
> Failure to comply with these requirements will void warranty.

2. Securely mount PCXZ main box in a nonhazardous location.

   Mount the configurator box(es) within two feet of the main box and attach the PCXZ config cable (supplied by PIE) between the two boxes. ***Refer to Dispenser & Reader Specific Installation section of this manual for instructions on connecting the PIE configurator box to the dispenser data distribution box.***

   Connect the RS232 serial cable between the Comm port of the POS and the POS port on the PCXZ main box. If necessary, jumpers may be reconfigured. ***Refer to Diagram: PCXZ Connector/Jumper Layout following instructions.***

3. Plug in the wall transformers for the main box and the configurator box to the dedicated outlets.

4. After power is applied, test installed equipment using PCC Demo Test Program supplied on system diskette. ***Refer to PCC Demo Test Program in the Diagnostics section of this document.***

5. If the dispensers have readers that are being controlled by the POS, test the readers at this time by running the PCCR test program supplied on the system/test diskette. If the PCCR test program performs correctly, the PCXZ has been installed properly.

6. Carefully following the vendor's setup instructions, run the POS application. ***If the system fails at this point, contact the vendor for additional instructions.***

For the POS/PCXZ system to function properly, the POS must be programmed for the exact number of dispensers to be controlled by the POS/PCXZ system. (An MPD has multiple hoses, but is considered to be only two dispensers — one dispenser on either side.)

Diagram: PCXZ Connector/Jumper Layout

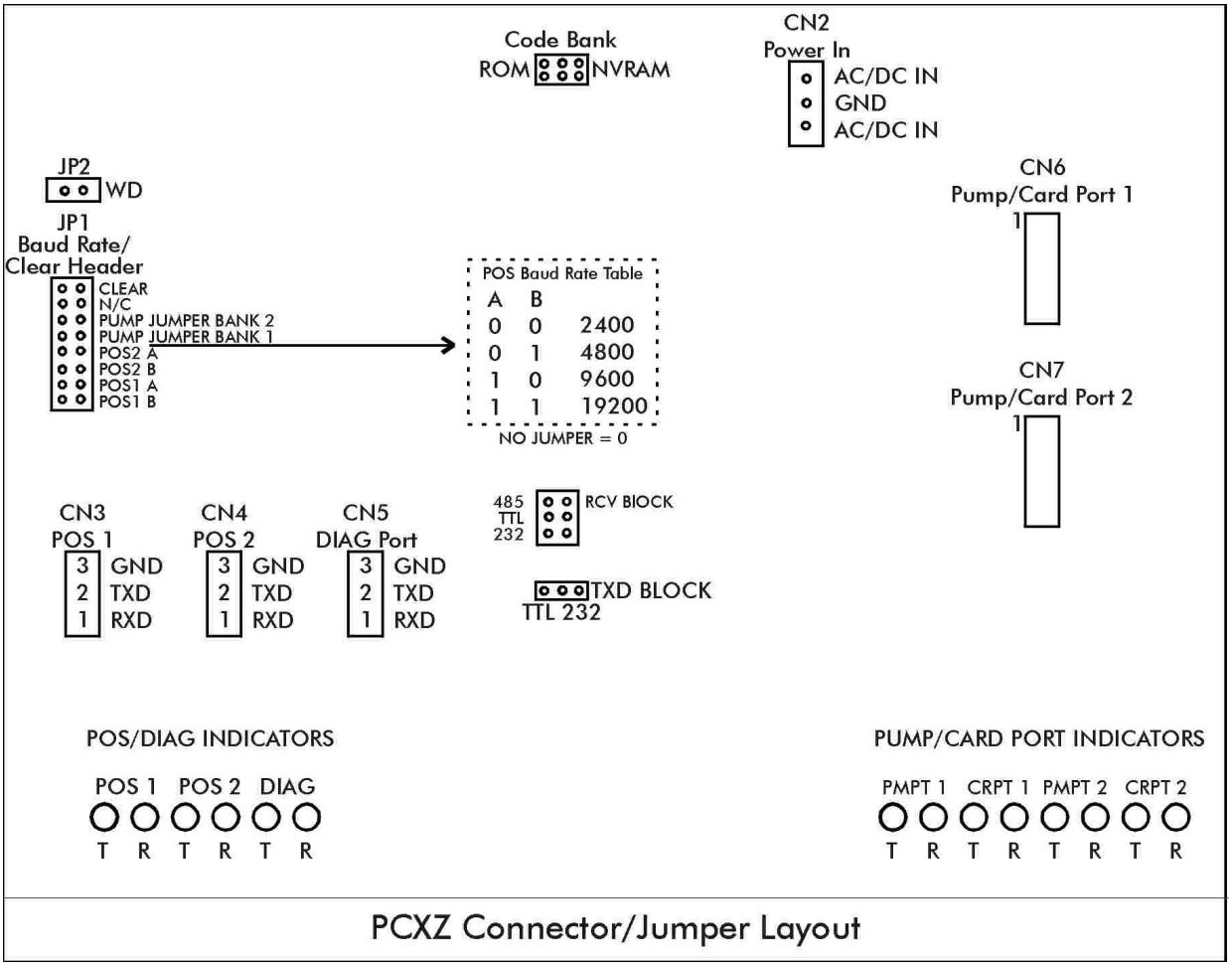

PCXZ Connector/Jumper Layout

System Installation

Dispenser & Reader Specific Installation

Gilbarco Electronic Dispenser

Note all warnings at the beginning of installation section.

Instructions for DBox installations in this manual are for the specific DBoxes supplied by dispenser manufacturers. If using DBoxes supplied by Progressive International, refer to the Installation Guide which accompanies PIE's DBox.

PIE ships current loop configurators as standard equipment. Some Gilbarco DBoxes are configured for RS422 operation. If the RS422 DBox cannot be converted to current loop operation, you must use an RS422 configurator and cables. Contact your PIE dealer to order.

Following instructions on preceding pages of installation section of this manual, mount PCXZ and configurator box(es). Then, follow specific instructions for connecting PCXZ system to the appropriate Gilbarco distribution box (DBox). ***Gilbarco DBoxes are listed on the following page.***

1. Disconnect the Gilbarco console from the distribution box and connect the Gilbarco style configurator box to the Gilbarco DBox using the appropriate cable supplied by PIE. ***Refer to Diagram: PCXZ to Gilbarco Electronic Dispenser following this section.***

2. Return to the PCXZ Installation Section for remaining system installation procedures.

Note: All Single Product Dispensers (SPDs) must be set for grade 1.

Listing: Gilbarco DBoxes

Gilbarco DBox Part #	Description
PA01330000	Old Style with DIN connector
PA0261X000010	Universal Style with 1 board current loop
PA0261X000020	Universal Style with 2 boards current loop
PA0261X000011	Universal Style with 1 board RS422
PA0261X000021	Universal Style with 2 boards RS422
PA0306X010	Gsite Style with 1 board RJ45 connector
PA0306X020	Gsite style with 2 boards RJ45 connector
PA0242	TS1000 Style

Diagram: Current Loop Configurator Voltage Jumper Selection

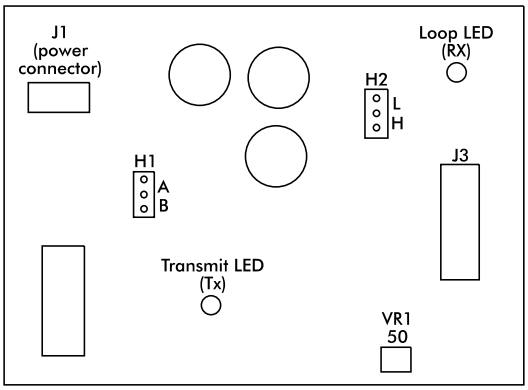

Jumper header H2 is used to set the voltage level on the current loop PI Configurator board. Choose between the settings below to select the correct voltage level for the application.

H 56 volts

Use this H (high) setting for the old style Gilbarco DBox (PAO1330000)

L 36 volts

Use this L (low) setting for all other Gilbarco applications

Current Loop PI Configurator Voltage Jumper Selection - Gilbarco

Diagram: PCXZ to Gilbarco Electronic Dispenser

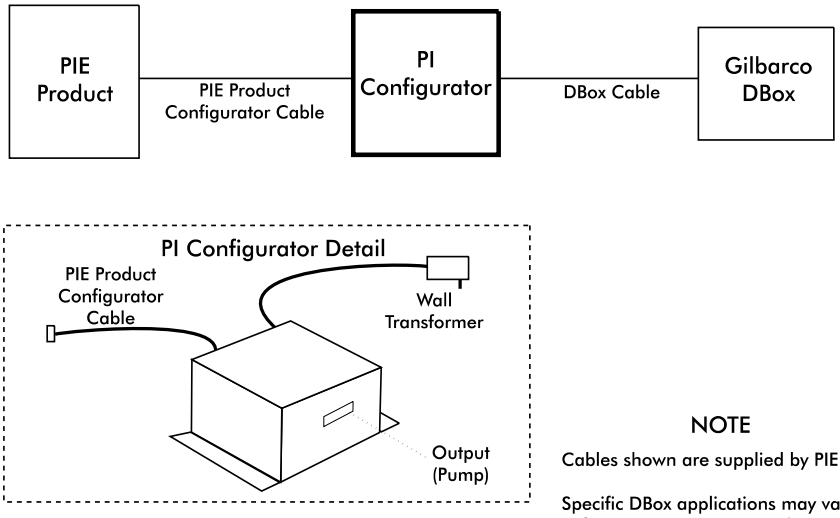

NOTE

Cables shown are supplied by PIE.

Specific DBox applications may vary.
Refer to appropriate DBox documentation.

PIE Product To PI Configurator to Gilbarco Dispenser

System Installation

Dispenser & Reader Specific Installation

Gilbarco CRIND

Note all warnings at the beginning of installation section.

Instructions for DBox installations in this manual are for the specific DBoxes supplied by dispenser manufacturers. If using DBoxes supplied by Progressive International, refer to the Installation Guide which accompanies PIE's DBox.

Following instructions on preceding pages of installation section of this manual, install PCXZ, configurator box(es) and dispenser. After successfully testing the dispensers using the PCXZ system, then follow these specific instructions for connecting the Gilbarco reader. ***See Diagram: PCXZ to Gilbarco Dispenser/CRIND.***

1. Locate the reader connector on the PIE dual Gilbarco configurator box. Plug the appropriate cable supplied by PIE into this connector and plug the other end into the Gilbarco CRIND distribution box or the PIE DBox. ***Refer to Diagram: PCXZ to Gilbarco Electronic Dispenser/CRIND which follows.***

2. Return to the PCXZ Installation Section for remaining system installation procedures.

Diagram: PCXZ to Gilbarco Electronic Dispenser/CRIND

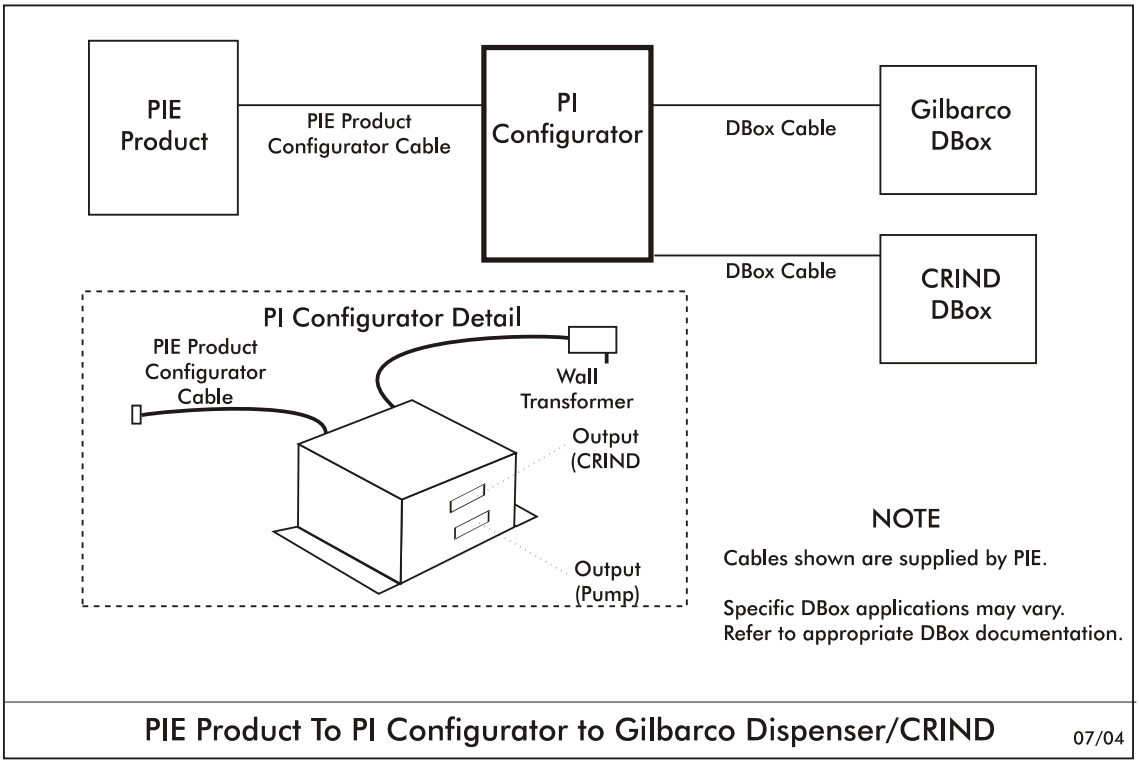

System Installation

Dispenser & Reader Specific Installation

Wayne/Dresser Electronic Dispenser

Note all warnings at the beginning of installation section.

Instructions for DBox installations in this manual are for the specific DBoxes supplied by dispenser manufacturers. If using DBoxes supplied by Progressive International, refer to the Installation Guide which accompanies PIE's DBox.

Following instructions on preceding pages of installation section of this manual, install PCXZ and configurator box(es). Then, follow specific instructions for connecting PCXZ system to the Wayne/Dresser DBox. ***Refer to Diagram: PCXZ to Wayne/Dresser Dispenser.***

1. Disconnect the Wayne/Dresser console from the distribution box and connect the Wayne/Dresser style configurator box to the DBox using the appropriate cable supplied by PIE. ***See Diagram: Wayne/Dresser DBox Connection Guide at end of this section.)***

2. Return to the PCXZ Installation Section for remaining system installation procedures.

3. If configuring for liter units, ensure that pump jumpers DA and DB at position JP1 are installed. ***See Diagram: PCXZ Connector/Jumper Layout.***

Diagram: PCXZ to Wayne/Dresser Electronic Dispenser

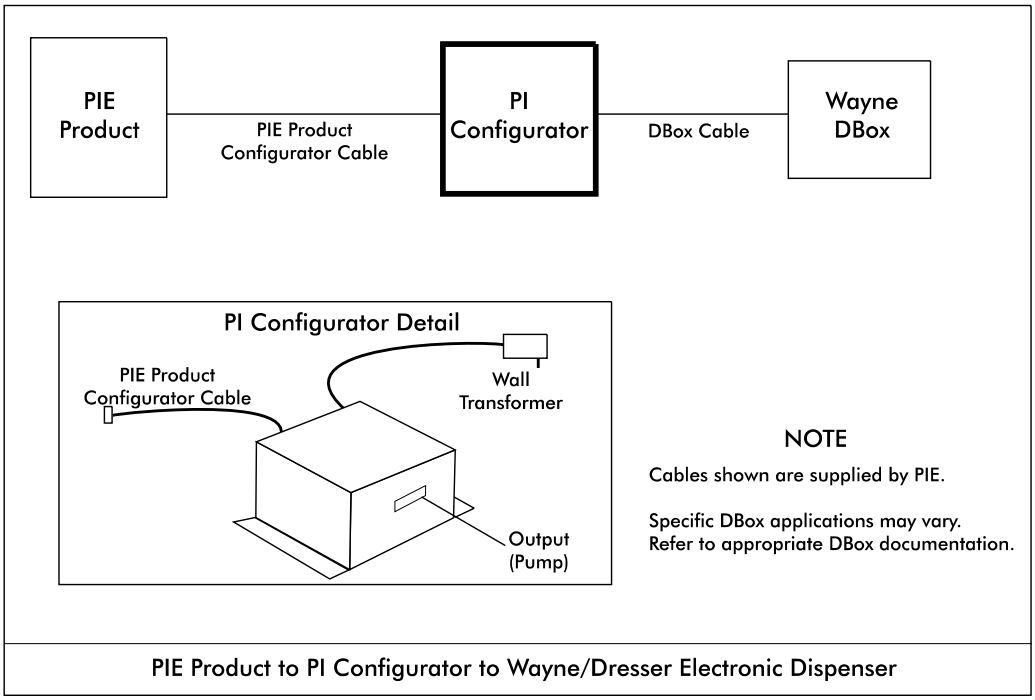

Diagram: Wayne/Dresser DBox Connection Guide

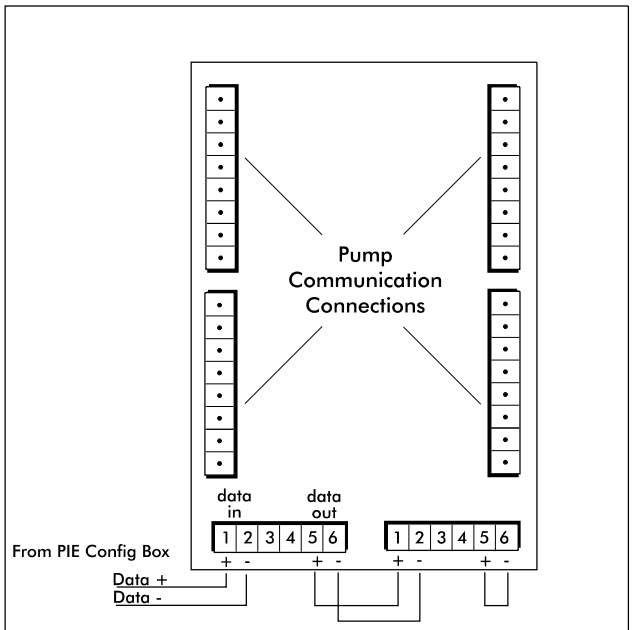

PIE Wayne/Dresser Config Cable Wire Color:

Data + RED
Data - BLACK

NOTE

If using DBoxes supplied by Progressive International, refer to the installation Guide which accompanies PIE's DBox.

Wayne/Dresser DBox Connection Guide

System Installation

Dispenser & Reader Specific Installation

Wayne/Dresser CAT

Note all warnings at the beginning of installation section.

Instructions for DBox installations in this manual are for the specific DBoxes supplied by dispenser manufacturers. If using DBoxes supplied by Progressive International, refer to the Installation Guide which accompanies PIE's DBox.

Following instructions on preceding pages of installation section of this manual, install PCXZ, configurator box(es) and dispenser. After successfully testing the dispensers using the PCXZ system, then follow these specific instructions for connecting the Wayne/Dresser reader. ***See Diagram: Typical PCXZ Controller to Wayne/Dresser Dispenser/CAT and Diagram: DBox for Wayne/Dresser CAT following this reader installation section.***

1. Locate the reader connector on the PIE dual Wayne/Dresser configurator box. Plug the appropriate cable supplied by PIE into this connector and plug the other end into the Wayne CAT distribution box supplied by PIE. Connect all the existing Wayne/Dresser CAT's into the PIE RS485 DBox.

2. Return to the PCXZ Installation Section for remaining system installation procedures.

Diagram: PCXZ to Wayne/Dresser Electronic Dispenser/CAT

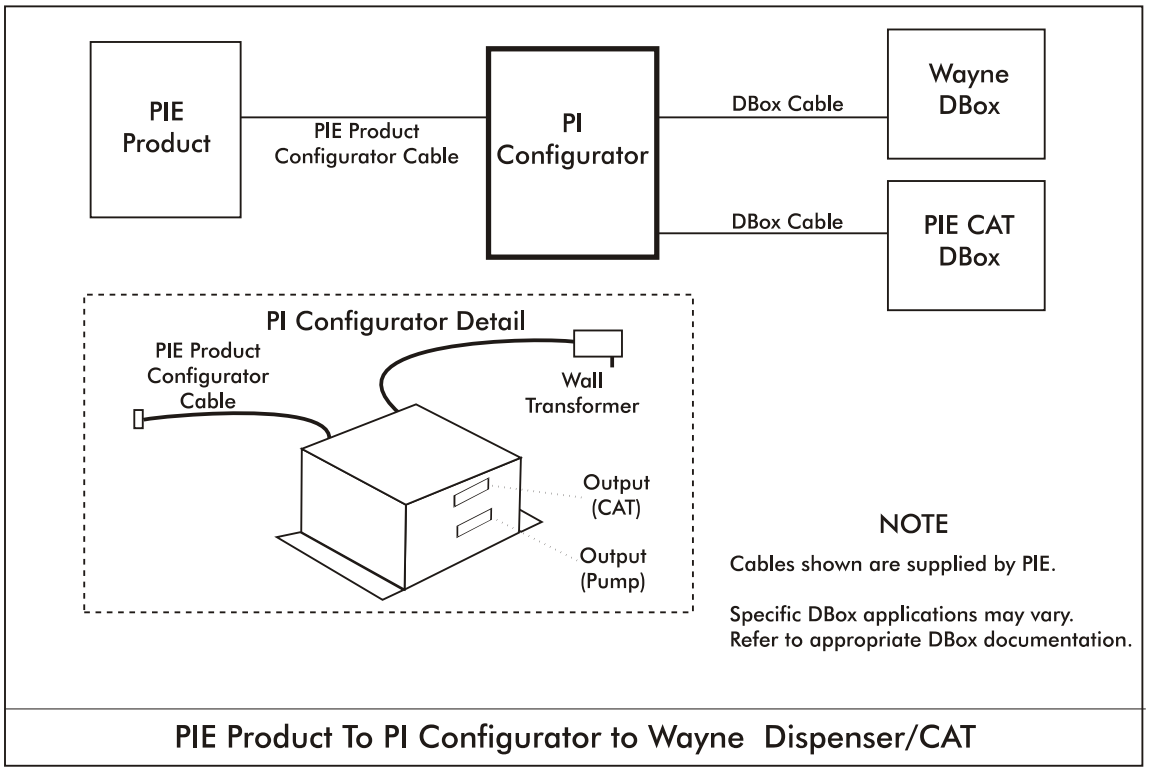

Diagram: PIE's DBox for Wayne/Dresser CAT

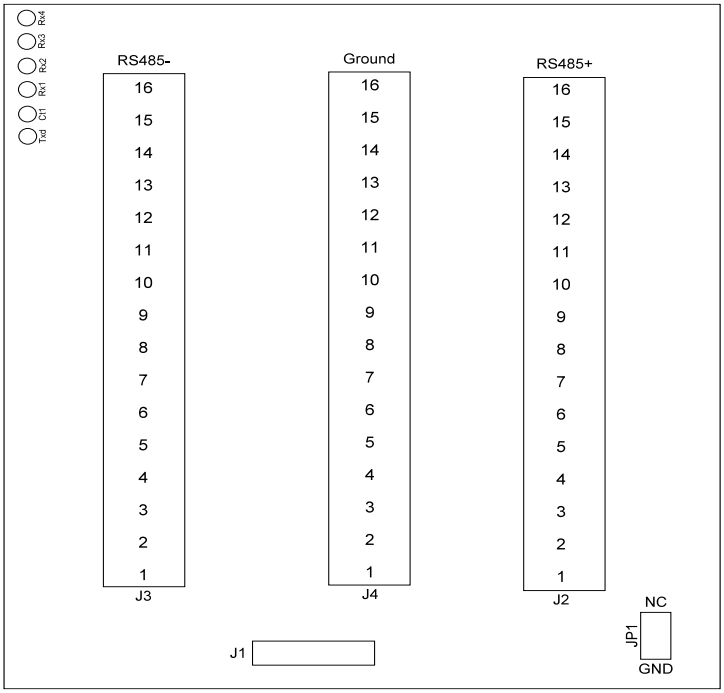

Connector Definitions:

- J1 - connector to RS485 configurator box
- J2 - connector strip for RS485+ lines
- J3 - connector strip for RS485- lines
- J4 - connector strip for Ground

Notes:

- RS485+ line, RS485- line, and ground line (if applicable) must be connected to the same position on J2, J3, and J4.
- MSM may also connect into any of the RS485 positions.

PIE's DBox, Used with Wayne/Dresser CAT

System Installation

Dispenser & Reader Specific Installation

Tokheim Electronic Dispenser

Note all warnings at the beginning of installation section.

Instructions for DBox installations in this manual are for the specific DBoxes supplied by dispenser manufacturers. If using DBoxes supplied by Progressive International, refer to the Installation Guide which accompanies PIE's DBox.

PIE normally ships Tokheim-standard communications style configurators. A 67B DBox must be either converted or have appropriate RS422 configurators and cable (supplied by PIE). If converting an RS422 67B DBox to Tokheim-standard communication, contact your Tokheim representative.

Following instructions on preceding pages of installation section of this manual, install PCXZ and configurator box(es). Then, follow specific instructions for connecting PCXZ system to the appropriate Tokheim DBox. ***Refer to Diagram: PCXZ to Tokheim 67 DBox and Diagram: PCXZ to Tokheim 98/94 Power Center following this section and Diagram: PCXZ to Two Tokheim 98/94 Power Centers later in this section.***

1. After installing the PCXZ, configurator box(es) and cabling according to the directions in this document, follow Tokheim's installation instructions and install dispensers.

For Dispensers Using Model 98/94 Computer/Power Center

(See next page for dispensers using Model 67 or 67B DBox.)

2. Install the Model 98/94 Computer/Power Center box according to Tokheim's installation manual. Dispensers must work in stand-alone before proceeding. ***Program dispensers as if connecting to a Tokheim Model 179 or Model 184 Console.***

3. Locate dispenser connection cable (with DB9S hooded connector on one end and a round connector on the other end).

4. Connect the dispenser connection cable to the connector on the Tokheim configurator box.

   Screw-lock this connector to the box with screws provided.

   For systems with 8 dispensers or less — Connect the dispenser connection cable directly to the Model 98/94 Computer/Power Center.

   For systems with more than 8 dispensers (2 Model 98/94 Computer/Power Centers), — Use a "Y" cable between the configurator box cable and the Model 98/94 Computer/Power Centers.

   Cables must be screw-locked together. The connection must be in a sheltered environment, protected from harsh elements such as water, extreme heat or cold.

For Dispensers Using Model 67 or 67B DBox

The 67 and 67B DBoxes are similar. Be sure to determine model number from nameplate before attempting to connect to this device or damage may occur.

2. Connect wires to the 67 connection box according to Tokheim's instructions. Program the dispensers as though they were connected to a MIMS-IV.

3. Locate dispenser connection cable (with DB9S hooded connector on one end and a round connector on the other end). Connect the dispenser connection cable to the connector on the Tokheim configuration box.

   Screw-lock this connector to the box with screws provided.

4. Locate the other end of the dispenser connection cable. Connect the round connector from the PCXZ cable to the cable from the 67 DBox.

   Cables must be screw-locked together. The connection must be in a sheltered environment, protected from harsh elements such as water, extreme heat or cold, etc.

5. If configuring for liter units, ensure that pump jumpers DA and DB at position JP1 are installed. ***See Diagram: PCXZ Connector/Jumper Layout.***

Diagram: PCXZ to Tokheim 67 DBox

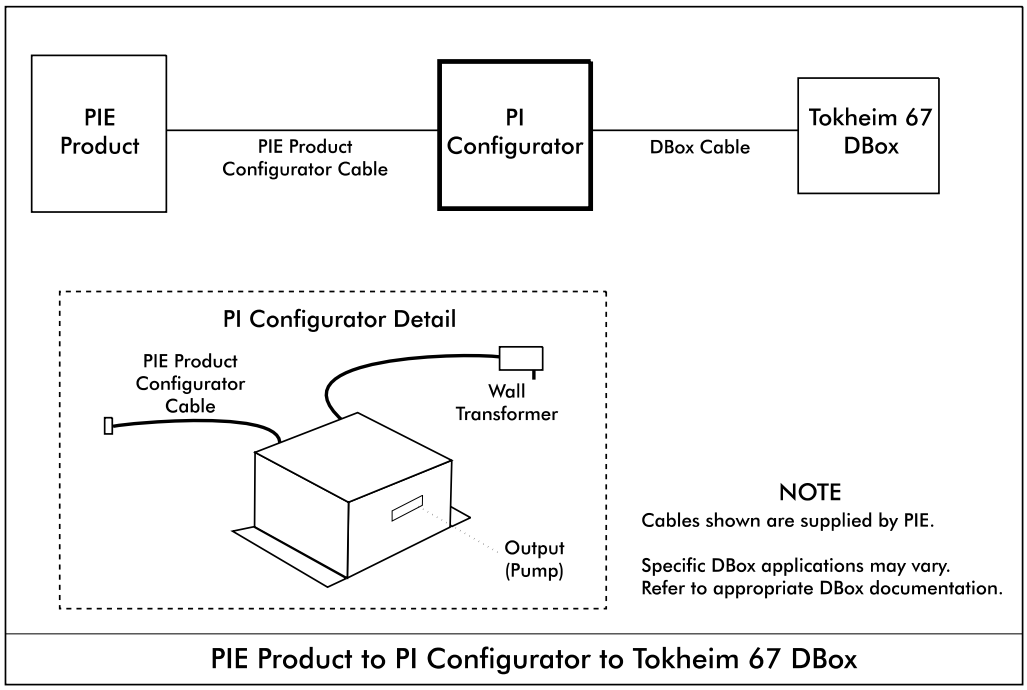

PIE Product to PI Configurator to Tokheim 67 DBox

Diagram: PCXZ to Tokheim 98/94 Power Center

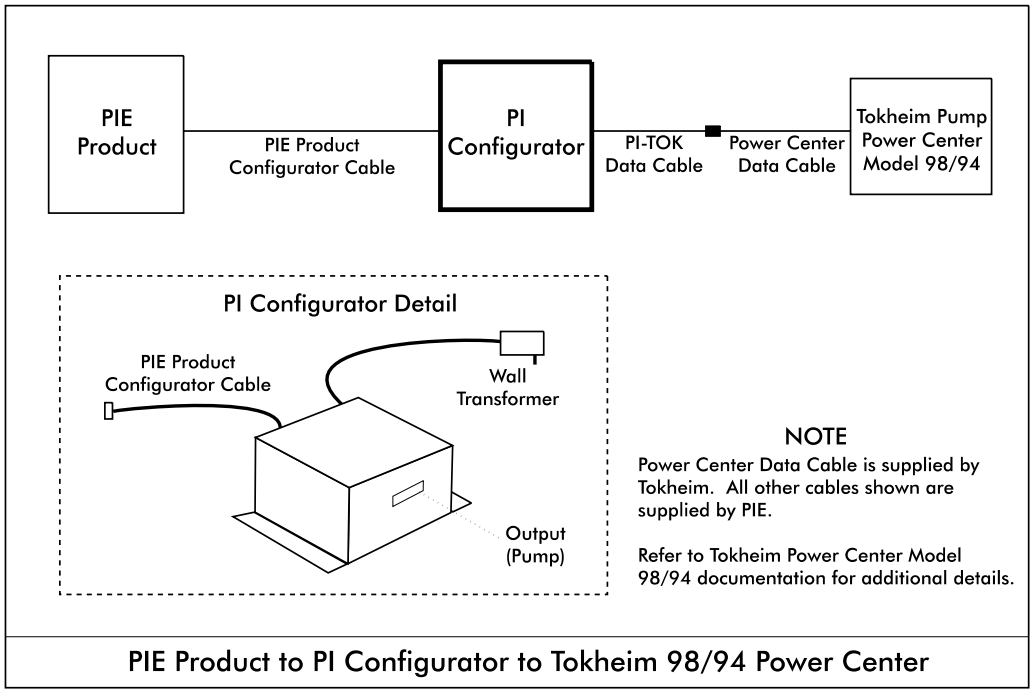

PIE Product to PI Configurator to Tokheim 98/94 Power Center

Diagram: Tokheim Configurator Board Emergency Relay Jumper

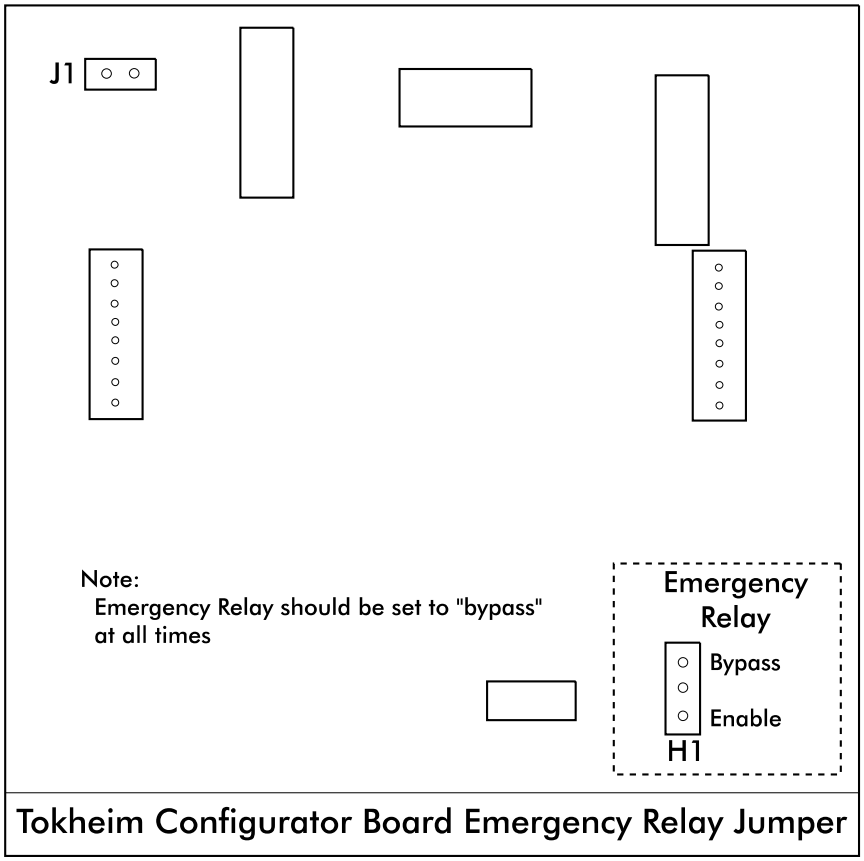

Tokheim Configurator Board Emergency Relay Jumper

System Installation

Dispenser & Reader Specific Installation

Tokheim DPT

Note all warnings at the beginning of installation section.

Instructions for DBox installations in this manual are for the specific DBoxes supplied by dispenser manufacturers. If using DBoxes supplied by Progressive International, refer to the Installation Guide which accompanies PIE's DBox.

Minimum dispenser software level supported is JP020800.

Following instructions on preceding pages of installation section of this manual, install PCXZ, configurator box(es) and dispenser. After successfully testing the dispensers using the PCXZ system, then follow these specific instructions for connecting the Tokheim reader. ***See Diagram: PCXZ to Tokheim Dispenser/DPT which follows.***

1. Locate the DPT connector on the PIE dual Tokheim configurator box. Plug the appropriate cable supplied by PIE into this connector and wire the other end into the Tokheim 69 distribution box. Connect all the existing Tokheim DPT's into the Tokheim 69 DPT DBox.

2. Return to the PCXZ Installation Section for remaining system installation procedures.

Diagram: PCXZ to Tokheim Dispenser/DPT

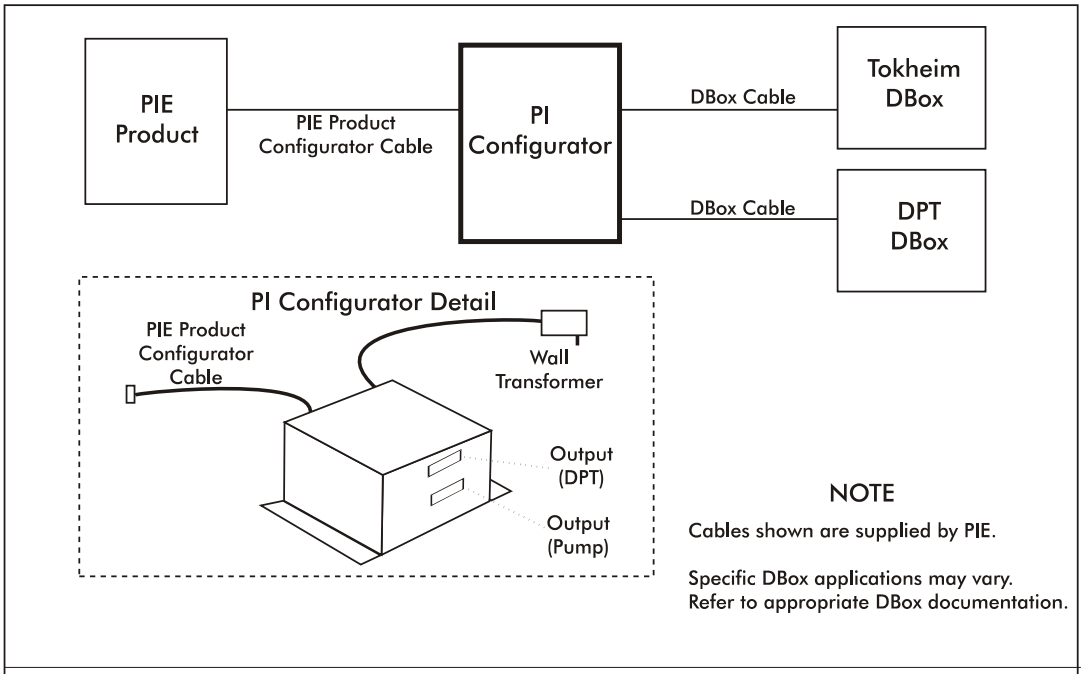

PIE Product To PI Configurator to Tokheim/DPT

System Installation

Dispenser & Reader Specific Installation

Schlumberger Electronic Dispenser

Note all warnings at the beginning of installation section.

Instructions for DBox installations in this manual are for the specific DBoxes supplied by dispenser manufacturers. If using DBoxes supplied by Progressive International, refer to the Installation Guide which accompanies PIE's DBox.

Following instructions on preceding pages of installation section of this manual, install PCXZ and configurator box(es). Then, follow specific instructions for connecting PCXZ system to the Schlumberger/SAM dispenser system. ***Refer to Diagram: PCXZ to Schlumberger Electronic Dispenser which follows.***

1. First, make sure that the Schlumberger dispensers are attached to a Schlumberger Access Module (SAM). The PCXZ controllers are designed to communicate and control Schlumberger dispensers through the Schlumberger Access Module (SAM).

2. Connect the output of the PIE Schlumberger Configurator to the POS1 connector (dispenser port) on the SAM with the cable provided by PIE.

3. For more reliable communication, ensure that SAM is set for 4800 baud for dispenser port and RS232 config is set to 4800.

When programming the dispenser, refer to the Schlumberger Dispenser Option 98 Programming Example later in this section.

Diagram: PCXZ to Schlumberger Electronic Dispenser

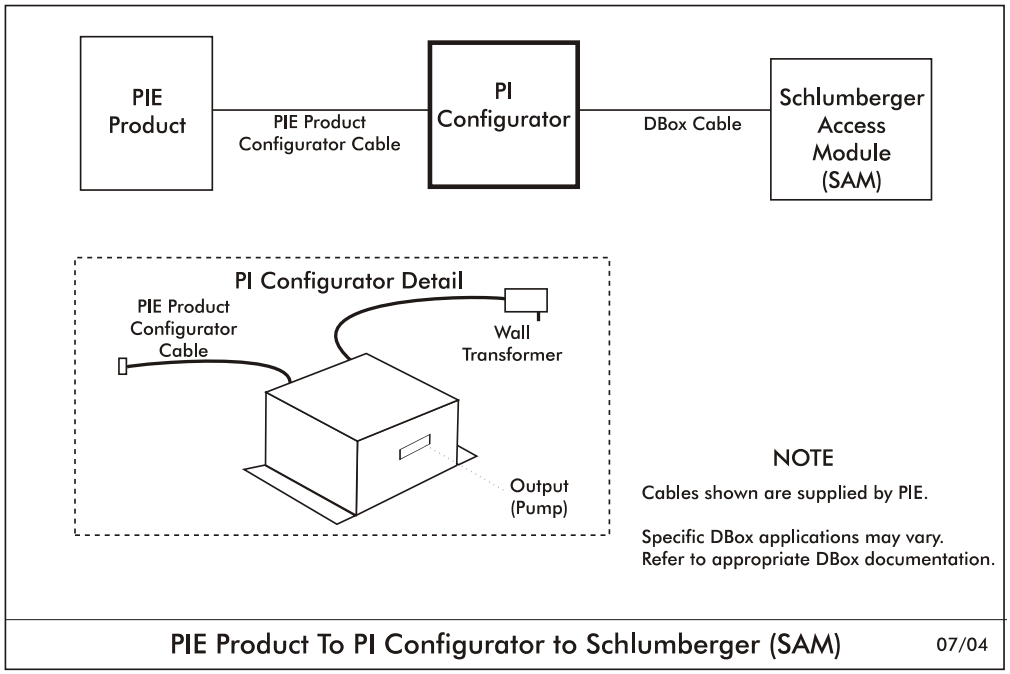

Schlumberger Electronic Dispenser Option 98 Programming Example

Schlumberger dispensers may be configured to operate in many different modes. Below is a listing of the option programming in the dispenser that is necessary for correct operation with the PCXZ. These parameters may be obtained by entering into the configuration mode on the dispenser, then executing an option dump using option 98. ***Refer to Schlumberger dispenser programmer's guide for instructions.***

Option #	Description	Setting
01	Access Code	0
11	Paymode Control — DISABLE OTHER PAYMODE	0
12	CNG Dispenser Mode	0
13	Side 1 Satellite — NO SATELLITE UNIT	1
13	Side 2 Satellite — NO SATELLITE UNIT	2
14	Master & Satellite Flow Enabled — NO CONCURRENT FLOW	0
15	Display Board Type — ICON DISPLAY EQUIPPED	1
16	Enable Icons — DISPLAY ICONS ENABLED	1
17	Flash Cash/Credit — FLASHING ICONS DISABLED	0
18	Single Hose — MULTI-HOSE OPERATION	0
23	Dispenser Handle Debounce Time	025
24	Enable Presets — NO PRESET KEYBOARD	0
24	Enable Presets — NO PRESET KEYBOARD	0
25	Comm Mode — XPIC COMM SUPPORT	4
26	Card Reader/Printer Hardware — LEFT-UP HW INSTALLED	2
28	Pulser Type	Single
29	Meter Type — GALLON METER INSTALLED	1
34	Max Flow Rate	0
36	Large Valve Prepay Slow Down Time — TIME IN SECONDS	0.200
37	Small Valve Prepay Slow Down Time — TIME IN SECONDS	0.000
38	Line Pressure Valve Delay	3.000
39	Flow Before Opening — LARGE VALVE	000
40	Amount of Flow Before Display Update — UNITS OF VOLUME	10
41	Num Prods-Side 1	3
41	Num Prods-Side 2	3
42	Num Pay Modes-Side 1	1
42	Num Pay Modes-Side 2	1
	Side 2 Programming	
	Display Position	1
	Dispenser Handle	1
	Product	00
	Base Product 1	00
	Base Product 2	15
	Meter/Valve Set 1	1
	Meter/Valve Set 2	0
	Sub-Dispenser 1	1
	Sub-Dispenser 2	0

Option #	Description	Setting
	Display Position	2
	Dispenser Handle	2
	Product	01
	Base Product 1	01
	Base Product 2	15
	Meter/Valve Set 1	2
	Meter/Valve Set 2	0
	Sub-Dispenser 1	2
	Sub-Dispenser 2	0
	Display Position	3
	Dispenser Handle	3
	Product	02
	Base Product 1	02
	Base Product 2	15
	Meter/Valve Set 1	3
	Meter/Valve Set 2	0
	Sub-Dispenser 1	3
	Sub-Dispenser 2	0
	Display Position	4
	Dispenser Handle	0
	Product	15
	Base Product 1	15
	Base Product 2	15
	Meter/Valve Set 1	0
	Meter/Valve Set 2	0
	Sub-Dispenser 1	0
	Sub-Dispenser 2	0
43	PPU Display Assignment (Side 1 Programming)	
	Display Position	1
	Dispenser Handle	1
	Product	00
	Base Product 1	00
	Base Product 2	15
	Meter/Valve Set 1	1
	Meter/Valve Set 2	0
	Sub-Dispenser 1	1
	Sub-Dispenser 2	0
	Display Position	2
	Dispenser Handle	2
	Product	01
	Base Product 1	01
	Base Product 2	15
	Meter/Valve Set 1	2
	Meter/Valve Set 2	0
	Sub-Dispenser 1	2
	Sub-Dispenser 2	0
	Display Position	3
	Dispenser Handle	3
	Product	02
	Base Product 1	02
	Base Product 2	15

Option #	Description	Setting
	Meter/Valve Set 1	3
	Meter/Valve Set 2	0
	Sub-Dispenser 1	3
	Sub-Dispenser 2	0
	Display Position	4
	Dispenser Handle	0
	Product	15
	Base Product 1	15
	Base Product 2	15
	Meter/Valve Set 1	0
	Meter/Valve Set 2	0
	Sub-Dispenser 1	0
	Sub-Dispenser 2	0
44	Decimal Position — Sale $ Display	2
45	Decimal Position — Volume Display	3
46	Decimal Position — PPU Display	2
51	Time Out, Paymode or Product Button	030
52	Pulser Time Out	000
53	Time Between Sales	003
54	Price Change — Dead Time	000
55	8's Reset Delay	001
56	1's Reset Delay	001
60	Customer Display Line Length	16
61	Prepay Paymode Confirm	
	Side 1 Programming	
	Paymode 0	1
	Paymode 2	1
	Paymode 3	1
	Paymode 4	1
	Paymode 5	1
	Paymode 6	1
	Paymode 7	1
	Side 2 Programming	
	Paymode 0	1
	Paymode 2	1
	Paymode 3	1
	Paymode 4	1
	Paymode 5	1
	Paymode 6	1
	Paymode 7	1
62	XPIE/Allied Primary Address	0
63	XPIC Allied Secondary Address	153
64	Enable Side 2 — SIDE 2 ENABLED	1
63	Restore Last Sale — RESTORE LAST SALE	1
66	Assign XPIC/Allied FP #	
	Side 1	01
	Side 2	02
67	Enable Pmode Selection	
	Side 1 — PAYMODE SELECTION REQ'D	1
	Side 2 — PAYMODE SELECTION REQ'D	1
68	Touchpad Type — CARD READER TOUCHPAD	1
69	Audible Prompting — PROMPT CUSTOMER W/ BEEP	5

Option #	Description	Setting
72	Volume Limit by Product	
	Prod 0 Limit	999.990g
	Prod 1 Limit	999.990g
	Prod 2 Limit	999.990g
	Prod 3 Limit	999.990g
	Prod 4 Limit	999.990g
	Prod 5 Limit	999.990g
	Prod 6 Limit	999.990g
	Prod 7 Limit	999.990g
73	Volume Limit by Paymode	
	PMode 0 Limit	999.990g
	PMode 1 Limit	999.990g
	PMode 2 Limit	999.990g
	PMode 3 Limit	999.990g
	PMode 4 Limit	999.990g
	PMode 5 Limit	999.990g
	PMode 6 Limit	999.990g
	PMode 7 Limit	999.990g
74	Dollar Limit by Product	
	Prod 0 Limit	$999.99
	Prod 1 Limit	$999.99
	Prod 2 Limit	$999.99
	Prod 3 Limit	$999.99
	Prod 4 Limit	$999.99
	Prod 5 Limit	$999.99
	Prod 6 Limit	$999.99
	Prod 7 Limit	$999.99
75	Dollar Limit by Paymode	
	PMode 0 Limit	$999.99
	PMode 1 Limit	$999.99
	PMode 2 Limit	$999.99
	PMode 3 Limit	$999.99
	PMode 4 Limit	$999.99
	PMode 5 Limit	$999.99
	PMode 6 Limit	$999.99
	PMode 7 Limit	$999.99
76	Product Price/Pay Mode (Side 1 Prices)	
	Prod 0 Price	$1.119
	Prod 0 Price	$1.119
	Prod 0 Price	$0.000
	Prod 0 Price	$0.000
	Prod 0 Price	$0.000
	Prod 0 Price	$0.000
	Prod 0 Price	$0.000
	Prod 0 Price	$0.000
	Prod 1 Price	$1.129
	Prod 1 Price	$1.129
	Prod 1 Price	$0.000
	Prod 1 Price	$0.000
	Prod 1 Price	$0.000
	Prod 1 Price	$0.000
	Prod 1 Price	$0.000
	Prod 1 Price	$0.000
	Prod 2 Price	$1.139
	Prod 2 Price	$1.139
	Prod 2 Price	$0.000
	Prod 2 Price	$0.000
	Prod 2 Price	$0.000
	Prod 2 Price	$0.000
	Prod 2 Price	$0.000
	Prod 2 Price	$0.000
	Prod 3 Price	$0.000
	Prod 3 Price	$0.000
	Prod 4 Price	$0.000
	Prod 4 Price	$0.000
	Prod 5 Price	$0.000
	Prod 5 Price	$0.000
	Prod 6 Price	$0.000
	Prod 7 Price	$0.000

Option #	Description	Setting
76 (cont.)	Product Price/Pay Mode(Side 2 Prices)	
	Prod 0 Price	$1.119
	Prod 0 Price	$1.119
	Prod 0 Price	$0.000
	Prod 0 Price	$0.000
	Prod 0 Price	$0.000
	Prod 0 Price	$0.000
	Prod 0 Price	$0.000
	Prod 0 Price	$0.000
	Prod 1 Price	$1.129
	Prod 1 Price	$1.129
	Prod 1 Price	$0.000
	Prod 1 Price	$0.000
	Prod 1 Price	$0.000
	Prod 1 Price	$0.000
	Prod 1 Price	$0.000
	Prod 1 Price	$0.000
	Prod 2 Price	$1.139
	Prod 2 Price	$1.139
	Prod 2 Price	$0.000
	Prod 2 Price	$0.000
	Prod 2 Price	$0.000
	Prod 2 Price	$0.000
	Prod 2 Price	$0.000
	Prod 2 Price	$0.000
	Prod 3 Price	$0.000
	Prod 3 Price	$0.000
	Prod 4 Price	$0.000
	Prod 4 Price	$0.000
	Prod 5 Price	$0.000
	Prod 5 Price	$0.000
	Prod 6 Price	$0.000
	Prod 7 Price	$0.000
80	Debit Mode — DEBIT MODE DISABLED	0
85	Time Out, SAVR Err — TIME IN SECONDS	020
86	Paper Low Sensor — NO PAPER LOW SENSOR	0
87	SAM Mode — SAM MODE ENABLED	1

System Installation

Dispenser & Reader Specific Installation

Shlumberger CardScan

Note all warnings at the beginning of installation section.

Instructions for DBox installations in this manual are for the specific DBoxes supplied by dispenser manufacturers. If using DBoxes supplied by Progressive International, refer to the Installation Guide which accompanies PIE's DBox.

Following instructions on preceding pages of installation section of this manual, install PCXZ, configurator box(es) and dispenser. After successfully testing the dispensers using the PCXZ system, then follow these specific instructions for connecting the Schlumberger reader. ***See Diagram: PCXZ to Schlumber Electronic Dispenser/CardScan which follows.***

1. First, make sure that the Schlumberger dispensers are attached to a Schlumberger Access Module (SAM). The PCXZ controllers are designed to communicate and control Schlumberger dispensers/readers through the SAM.

2. Connect the reader output of the PIE Schlumberger configurator to the POS2 (reader port) connector on the SAM with the cable provided by the PIE.

3. For more reliable communication, ensure that SAM is set for 4800 baud for dispenser port and RS232 config ius set to 4800.

When programming the dispenser, refer to the Schlumberger Dispenser option 98 Programming Example in the preceding section.

Diagram: PCXZ to Schlumberger Electronic Dispenser/CardScan

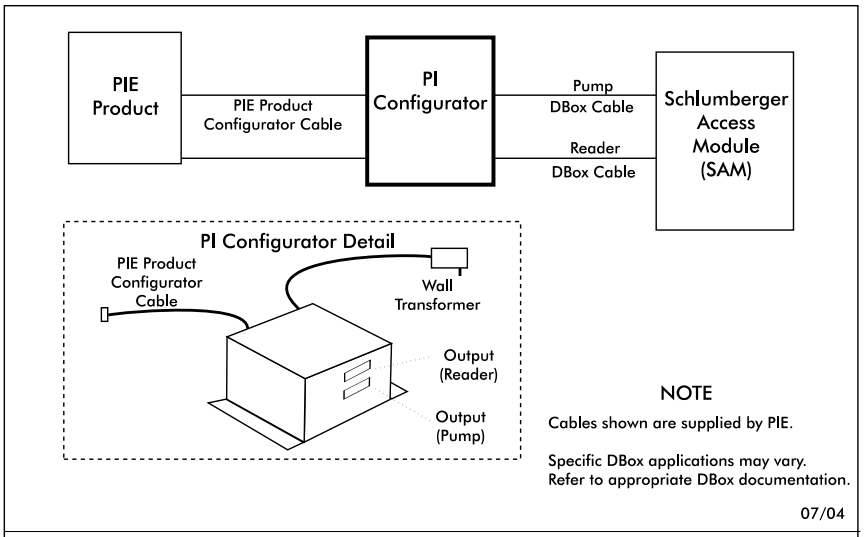

PIE Product To PI Configurator to Schlumberger Electronic Dispenser/CardScan

System Installation

Dispenser & Reader Specific Installation

Kraus Electronic Dispenser

Note all warnings at the beginning of installation section.

Instructions for DBox installations in this manual are for the specific DBoxes supplied by dispenser manufacturers. If using DBoxes supplied by Progressive International, refer to the Installation Guide which accompanies PIE's DBox.

The following Kraus models must have the minimum version of software noted to work properly with Progressive equipment:

Micon 100	
152 printed circuit board	*versions 3.1 & 3.2*
252 printed circuit board	*version 6.30*
463 PLCC processor	*version 7.03*
Micon 200	*version 1.09*
Micon 300	*version 2.04*
Micon 500	*to be announced*

Following instructions on preceding pages of installation section of this manual, install PCXZ and configurator box(es). Then, follow specific instructions for connecting PCXZ system to the appropriate Kraus DBox.

1. Connect the data communication wires from the Kraus dispenser into the dispenser connectors on the PIE Kraus Configurator board. ***See Diagram: PCXZ to Kraus Electronic Dispensers which follows.*** Note that there are three data communication wires connecting to a Kraus dispenser. They are labeled as follows:

   TTC Talk to Console/Kraus dispenser transmit data
   TTP Talk to Dispenser/Kraus dispenser receive data
   DDC Data Common / Kraus dispenser ground

2. Note the layout of the Kraus dispenser head. ***Refer to Diagram: Kraus Dispenser Head Layout.***

3. If submerged turbine dispensers are used, install according to Kraus dispenser installation instructions or install optional PIE relay control box. ***See Diagram: Kraus Turbine Dispenser Layout at end of this section.***

Diagram: PCXZ to Kraus Electronic Dispensers

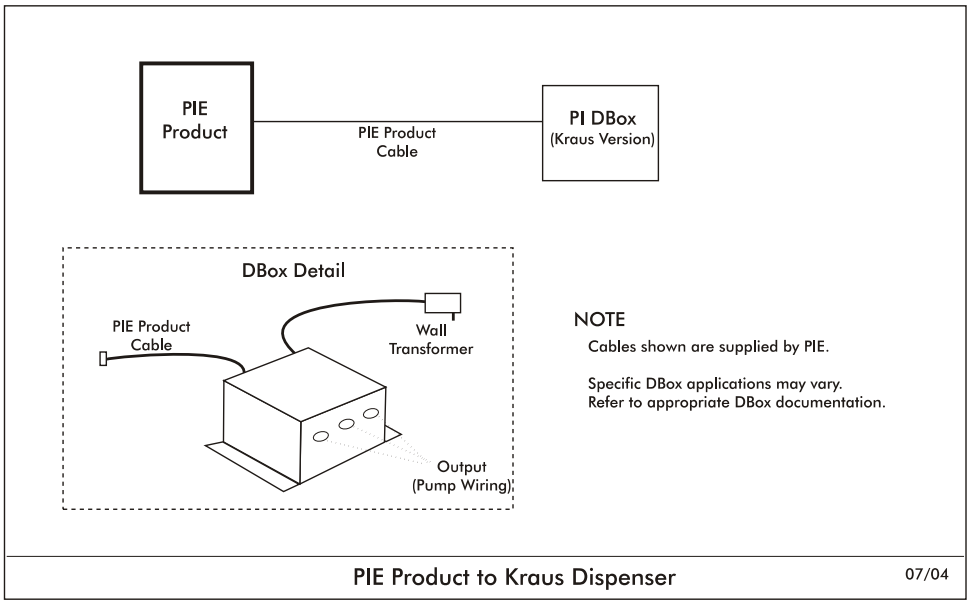

Diagram: Kraus Configurator Board

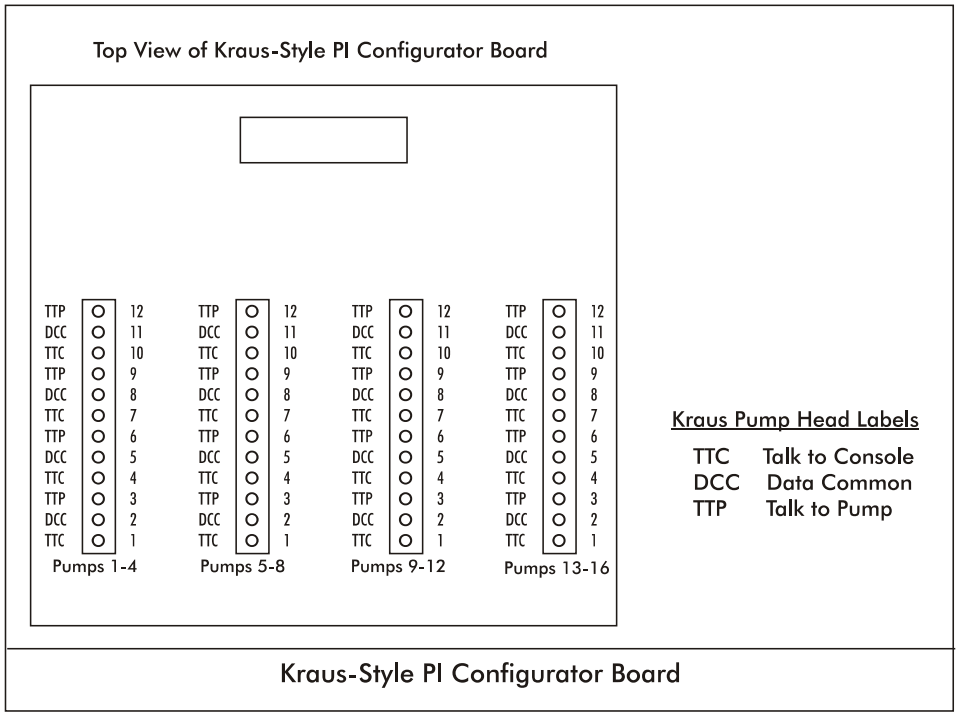

Diagram: Kraus Dispenser Head Layout

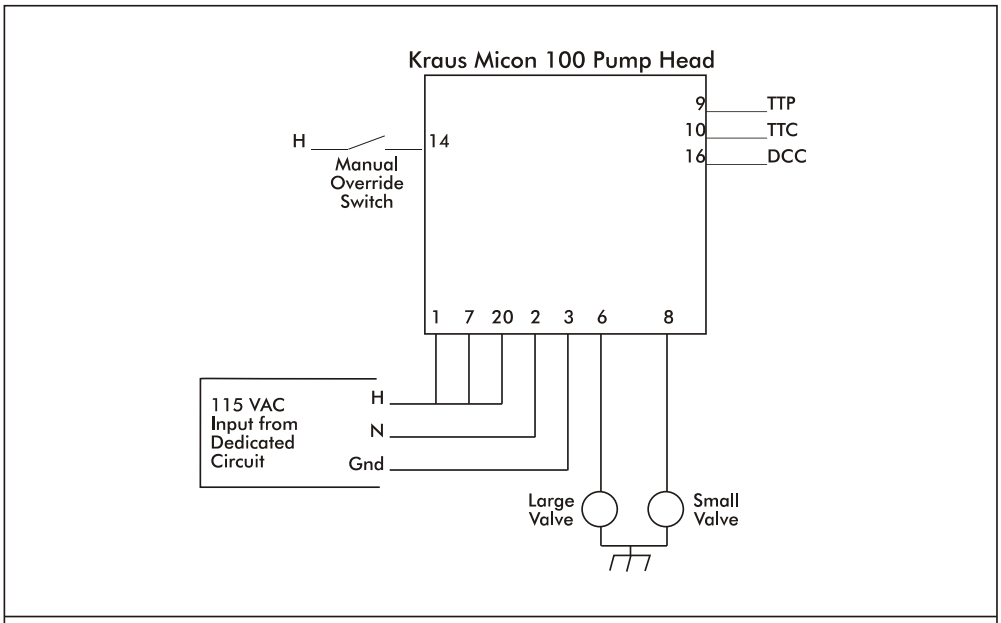

Kraus Dispenser Head Layout

System Installation

Dispenser & Reader Specific Installation

Bennett Electronic Dispenser

Note all warnings at the beginning of installation section.

Instructions for DBox installations in this manual are for the specific DBoxes supplied by dispenser manufacturers. If using DBoxes supplied by Progressive International, refer to the Installation Guide which accompanies PIE's DBox.

Following instructions on preceding pages of installation section of this manual, install PCXZ and configurator box(es). Then, follow specific instructions for connecting PCXZ system to the Bennett dispensers. ***Refer to Diagram: PCXZ to Bennett Electronic Dispensers.***

1. Connect the data communication wires from the Bennett dispensers (Orange [+] and Yellow [-]) into the dispenser connectors (J4 & J5) on the Bennett Configurator Box provided by PIE. ***See Diagram: Bennett Connector Layout.***

2. Locate the communication enable dip switches (SW1 & SW2) on the Bennett Configurator Box. Beginning with dispenser #1, turn on the #1 dip switch. Test the Dispenser 1 position for correct operation as described in the general installation section. Continue this process for all dispensers that exist at the site. When this installation procedure is complete, a dip switch should be turned on for each position that has a dispenser wired to it. It is important that only connected dispensers be switched on. All unused positions must be switched off. ***Refer to Diagram: Bennett Connector Layout.***

Diagram: PCXZ to Bennett Electronic Dispensers

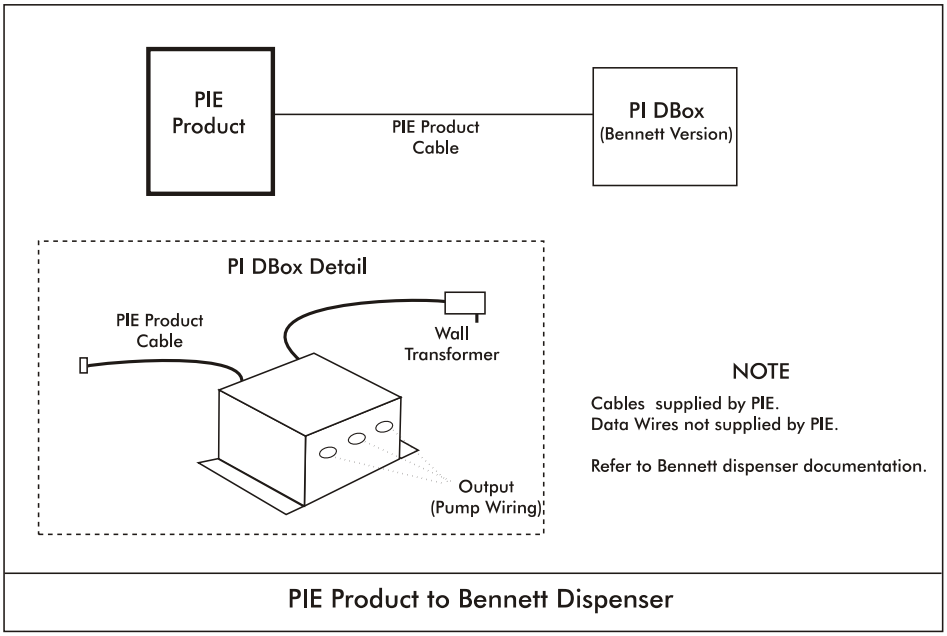

Diagram: Bennett Connector Layout

Top View of
Bennett Style PI DBox Board

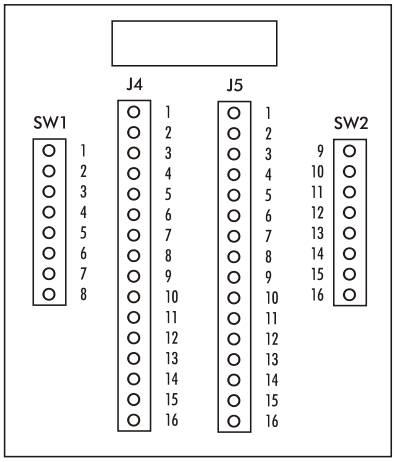

Note: SW1 and SW2 are "enable" switches that must be turned *on* for pump(s) wired to the PI DBox board.

Connection Chart
for Bennett Data Communication Wires

PIN #	J4	J5
1	pump 1+	pump 9+
2	pump 1-	pump 9-
3	pump 2+	pump 10+
4	pump 2-	pump 10-
5	pump 3+	pump 11+
6	pump 3-	pump 11-
7	pump 4+	pump 12+
8	pump 4-	pump 12
9	pump 5+	pump 13+
10	pump 5-	pump 13-
11	pump 6+	pump 14+
12	pump 6-	pump 14-
13	pump 7+	pump 15+
14	pump 7-	pump 15-
15	pump 8+	pump 16+
16	pump 8-	pump 16-

Bennett Connector Layout

System Installation

Dispenser & Reader Specific Installation

Tatsuno Electronic Dispenser

Note all warnings at the beginning of installation section.

Instructions for DBox installations in this manual are for the specific DBoxes supplied by dispenser manufacturers. If using DBoxes supplied by Progressive International, refer to the Installation Guide which accompanies PIE's DBox.

Following instructions from installation section of this manual, mount PCXZ and configurator box(es). Then, follow specific instructions for connecting PCXZ system to the Tatsuno dispensers. ***Refer to the PIE RS485 DBox Connections diagram following this section.***

1. Connect the RS485 style configurator box to the RS485 DBox using the appropriate cable supplied by PIE.

2. Connect the Tatsuno RS485 communication lines from each dispenser to the PIE RS485 DBox board. ***Refer to Diagram: PIE RS485 DBox Connections and Diagram: PCXZ to Tatsuno Electronic Dispenser which follow.***

3. Return to the PCXZ Installation Section for remaining system installation procedures.

Diagram: PIE RS485 DBox Connections

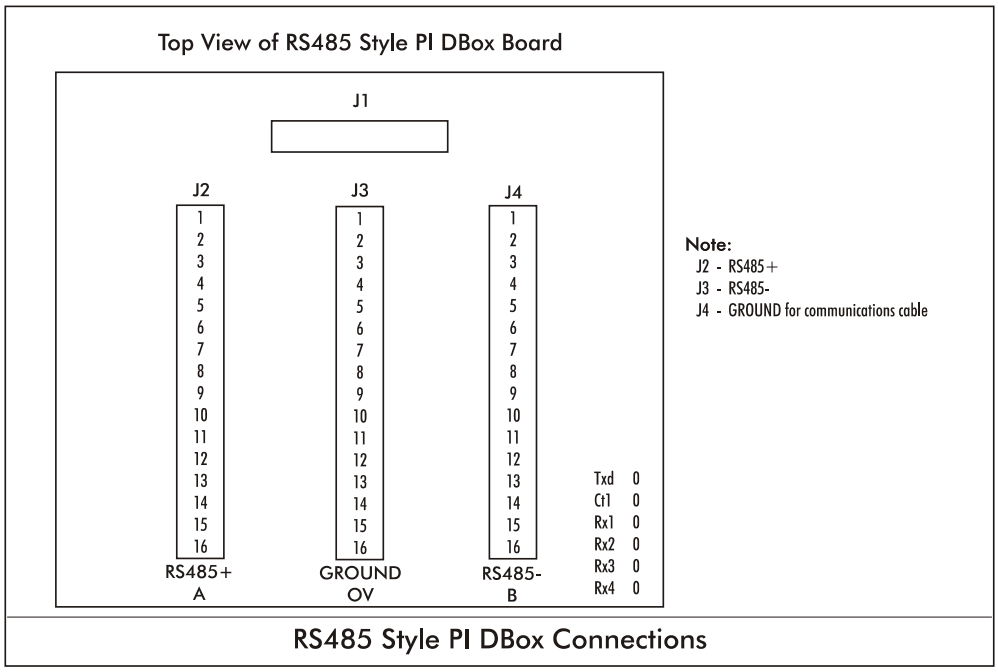

RS485 Style PI DBox Connections

Diagram: PCXZ to Tatsuno Electronic Dispensers

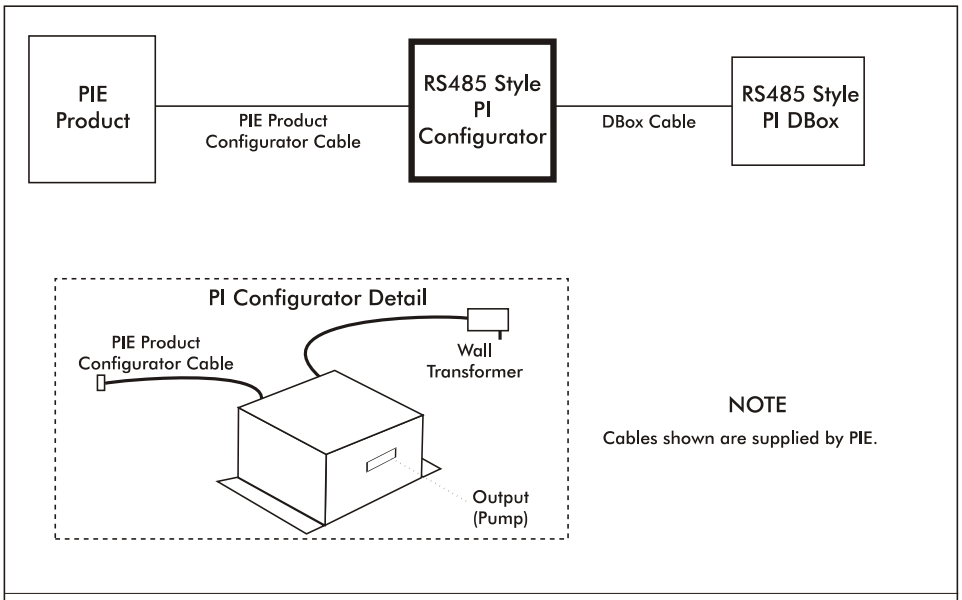

PIE Product to PI Configurator to Tatsuno Dispenser

System Installation

Dispenser & Reader Specific Installation

Nuovo Pignone Electronic Dispenser

Note all warnings at the beginning of installation section.

Instructions for DBox installations in this manual are for the specific DBoxes supplied by dispenser manufacturers. If using DBoxes supplied by Progressive International, refer to the Installation Guide which accompanies PIE's DBox.

Following instructions from installation section of this manual, mount PCXZ and configurator box(es). Then, follow specific instructions for connecting PCXZ system to the Nuovo Pignone dispensers. ***Refer to the PIE RS485 DBox Connections diagram following this section.***

1. Connect the RS485 style configurator box to the RS485 DBox using the appropriate cable supplied by PIE.

2. Connect the Nuovo Pignone RS485 communication lines from each dispenser to the PIE RS485 DBox board. ***Refer to Diagram: PIE RS485 DBox Connections and Diagram: PCXZ to Nuovo Pignone Electronic Dispenser which follow.***

3. Return to the PCXZ Installation Section for remaining system installation procedures.

Diagram: PIE RS485 DBox Connections

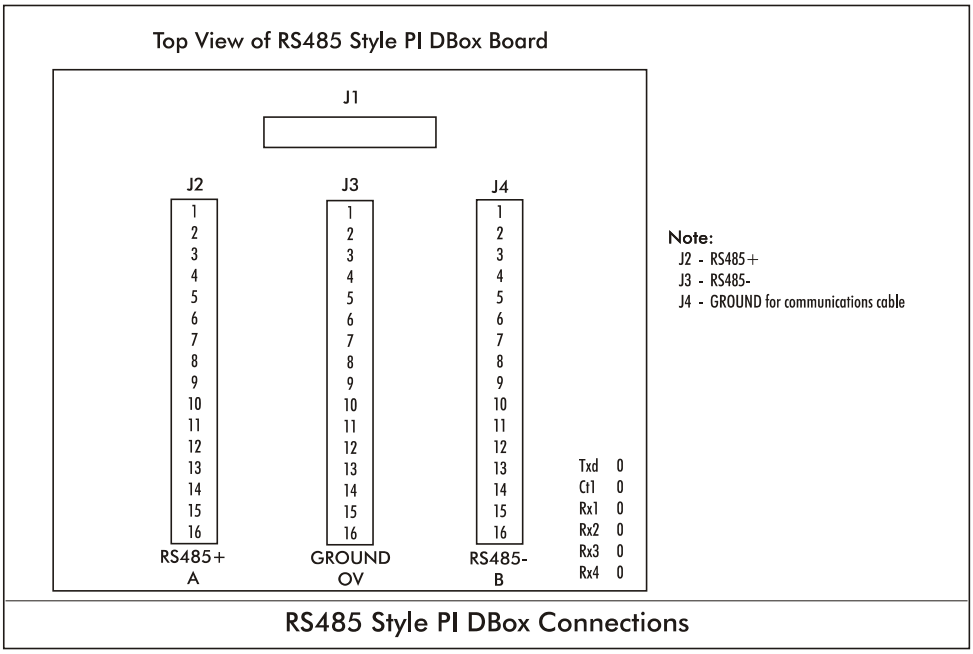

Diagram: PCXZ to Nuovo Pignone Electronic Dispensers

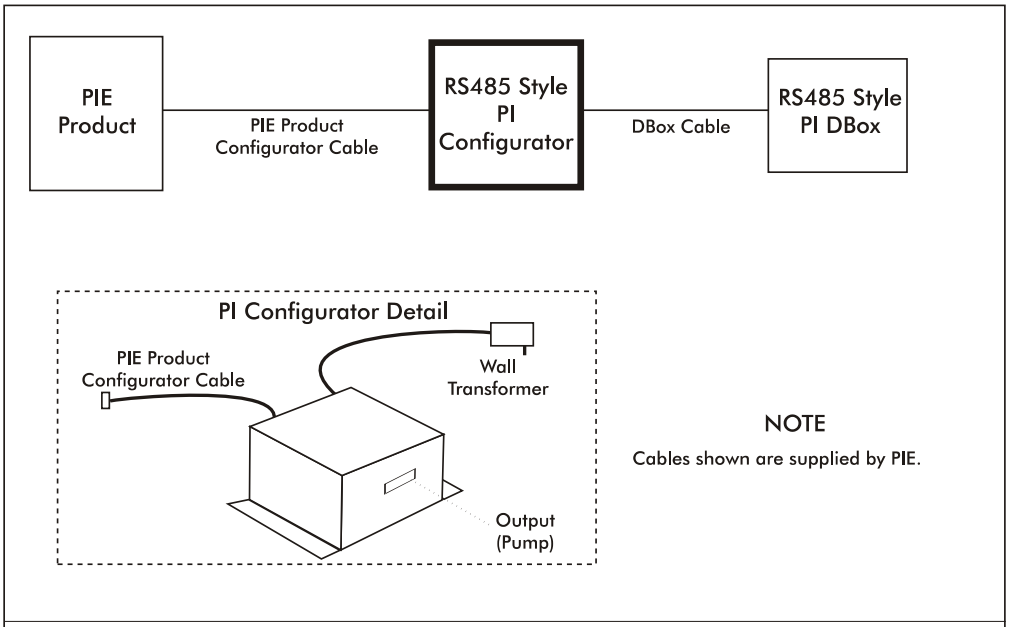

PIE Product to PI Configurator to Nuovo Pignone Dispenser

Diagnostics

PCXZ Internal Diagnostics

The PCXZ controllers have on-board diagnostics which are helpful in solving problems encountered in the field. Below are a few of the standard diagnostic functions built into the controller.

- Show Dispenser Information
  - Version Numbers
  - Monitor A Port

To access this feature, all you need is a terminal or a computer running terminal emulation software such as Procomm or Hyperterm for Windows. The diagnostic port is a serial port with the following connection parameters. ***Note: A standard 9 pin serial cable is used to connect the terminal device to the diagnostic port, not a null modem cable. See the diagrams on the following pages for connector locations.***

- Baud Rate 19,200
- Data Bits 8
- Parity No
- Stop Bits 1
- Flow Control No

After connecting to the diagnostics port, power up the controller, type a question mark (?), and press enter. A menu will appear, displaying the various diagnostic functions available. To select a function, type the letter shown in the menu and press enter. Some features will prompt for additional information. To exit a diagnostic function, press the escape key. The display will show a dash line waiting for another command from the user. Any time a prompt (–>) dash line is shown, a question mark may be entered to display the menu.

Diagram: PCXZ Diagnostic Port Location

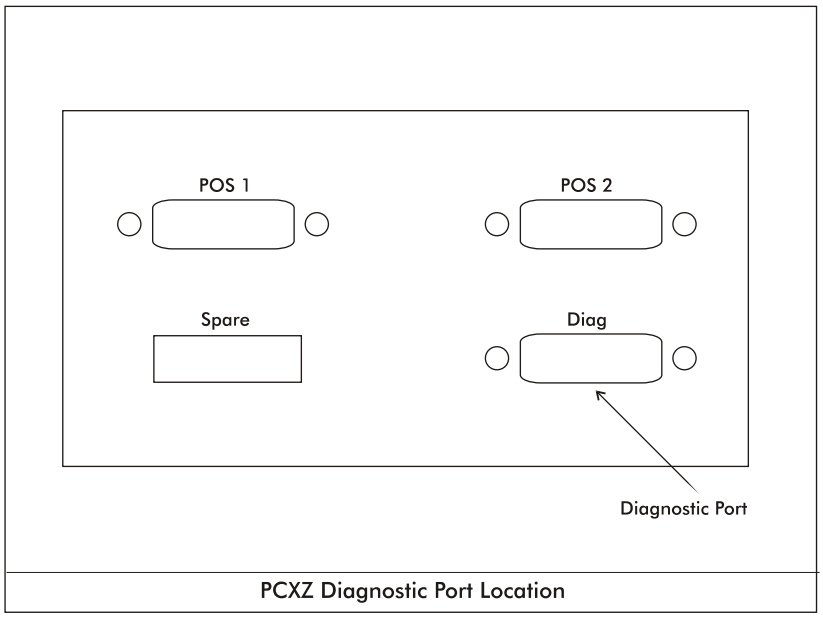

Diagnostics

Dispenser Control Center Demo Test Program

Progressive International Electronics' PCC Demo Test Program simulates a generic POS application program. It may be used for both demonstrations and field diagnostics. The PCC Demo Test Program is provided on the same disk as the Dispenser Simulator Program, and is loaded on a second computer.

Loading the PCC Demo Test Program

For the PCC Demo Test Program to operate correctly, the ANSI.SYS screen driver must also be loaded on the computer. If this driver is not installed, locate the ANSI.SYS file on your computer, add the following line to the CONFIG.SYS file and reboot the computer.

DEVICE=C:\[path]\ANSI.SYS

The programs on the distribution disk should be copied into a subdirectory on the hard drive. This may be accomplished by creating a subdirectory (i.e., PCC) and copying all the files to the subdirectory. The files to be copied to the subdirectory are as follows.

PCC.EXE
PCC_SERL.EXE
SYSTEM.DAT

To start the PCC program, first execute the DOS TSR driver for the controller. The driver used for Progressive's controllers is:

PCC_SERL
(sets Comm 1, 9600 baud, INT Vector 60)
PCC_SERL P2F8 i3
(sets Comm 2, 9600 baud, INT vector 60)

For extended settings for PCC_Serl, view the readme.txt file on the PCC Demo Disk.

Next, execute PCC.EXE.

Main Screen

F1 = Help
F2 = Set up the PC port
F3 = Operator mode
F4 = Program mode
F5 = Read the error
F6 = Reset the PCC
F7 = Set printer
F9 = Set screen
F10 = Exit to DOS
Select the Function:

F4 Screen — Program Mode

F4 should be performed first in order to set up the system prices for each dispenser (fueling position) and hose. The F4 screen is as follows.

	Cash PPU	Credit PPU	Blend Ratio
Hose #1	0.000	0.000	000
Hose #2	0.000	0.000	000
Hose #3	0.000	0.000	000
Hose #4	0.000	0.000	000
Hose #5	0.000	0.000	000
Hose #6	0.000	0.000	000
Hose #7	0.000	0.000	000

Key in the cash and credit PPU according to dispenser number and hose number.

F2 Screen — Set Up the PC Port

Once the prices have been programmed, press F2 to connect the DOS TSR driver and to start the communication with the controller. To use the default of 60, press the ENTER key. The F2 screen appears as below.

Set up the PC port

(Press enter for a default of 60)
Enter the driver interrupt number (HEX):

F3 Screen — Operator Mode

F3 brings up the operator screen, in which the dispensers are controlled. As fuel is dispensed, the dollar value and the volume dispensed will appear on the screen. The screen appears as below.

Operator Control

F1 = Help	F2 = Dispenser #
F3 = (E)Stop	F4 = (A)Resume
F5 = Collect	F6 = Grade #
F7 = Preset $	F8 = Authorize
F9 = Totals	F10 = Exit
PGDN = Next Dispenser	HOME = Dispenser 1
PGUP = Prev Dispenser	END = Dispenser 32

System ST: 00

1 -	2 -	3 -	4 -
$ 000.00 V 000.00	$ 000.00 V 000.00	$ 000.00 V 000.00	$ 000.00 V 000.00
5 -	6 -	7 -	8 -
$ 000.00 V 000.00	$ 000.00 V 000.00	$ 000.00 V 000.00	$ 000.00 V 000.00
9 -	10 -	11 -	12 -
$ 000.00 V 000.00	$ 000.00 V 000.00	$ 000.00 V 000.00	$ 000.00 V 000.00
13 -	14 -	15 -	16 -
$ 000.00 V 000.00	$ 000.00 V 000.00	$ 000.00 V 000.00	$ 000.00 V 000.00

F5 Screen — System Error

If a system error occurs, it may be read by pressing F5. The screen is as follows.

Press the F10 key to clear all errors and exit or

Press any key to continue

F7 Screen — Set Printer

Perform F7 to enter a Print Header. This screen will appear.

CR

The header has been cleared

F9 Screen — Set Screen

F9 changes screen colors. The following screen will appear.

Select the screen colors
the current colors are

12 -
$ 000.00 V 000.00

Diagnostics

Command Structure for Downloading PCXZ Downloadable Controllers

The download function must be implemented before loading TSR.

PIE's PCXZ series of controllers consists of two versions, ROM and downloadable. The downloadable version is designed to allow the dispenser and credit card reader software to be downloaded directly from the POS terminal into the PCXZ. This feature eliminates the need to change EPROMs for each dispenser brand.

The enclosed diskette contains the BIN files necessary for each dispenser type supported by PIE. These BIN files may be downloaded individually. For your convenience, batch files (.BAT) for the most common dispenser brands are also provided, allowing the user to load all necessary files to the controller with one command (i.e., DL_GIL). ***See Brand-Specific Batch Files later in this section.***

The entire download process takes less than two minutes. Files will only need to be downloaded once since they remain resident in an area of memory protected by battery backup. New controllers ordered will be loaded with the dispenser software specified on the order and should not require reloading.

The enclosed diskette also contains the test programs PIE offers for troubleshooting and demonstration. (It should be left with the store manager for future use.) These programs are PCC.EXE for non-reader dispensers and PCCR.EXE for dispensers with CRINDs. The following equipment is required to run these programs and the download:

Laptop computer or PC running DOS (not DOS shell)
1 to 1 RS232 serial cable
Diskette provided by PIE
PCXZ and cables

Download Format

Below is the format used by the download program to send software to the PCXZ. Descriptions of the switch parameters are also listed.

Download fn.typ [Comm port] [bank code] [type code]
i.e., Download Pos.Bin 1 0 c

Comm Ports
1 - 4 => Comm 1 -> Comm 4

Additional Ports
A = 0x2AB
B = 0x3AB
C = 0x2BB
D = 0x3BB

Banks

0 = POS
1 = PC/CC1
2 = PC/CC2
3 = Dispenser 1-16
4 = Card 1-16
5 = Dispenser 17-32
6 = Card 17-32

Type

C = Clear all code banks first
A = Append bank (do not reset)
E = Reset controller when done

The process of downloading configuration files to the PCXZ may be accomplished by following either of the sequences listed below:

1. Insert diskette into drive (A: or B:). The prompt should be either A:\ or B:\.
2. Type "Download POS.BIN [Comm Port] [Bank Code] [Type Code]" (i.e., Download POS.BIN 1 0 C)
3. Continue to download all necessary dispenser and card information (if required) to the appropriate banks.

OR

Type "DL_xxx y" where xxx is the dispenser type and y is the destination Comm Port. This is the format for using one of the batch files which loads all appropriate files into the corresponding bank. The actual files from the diskette provided by PIE are listed below. These formats are used by the download program to send software to the PCXZ

	Brand-Specific Batch Files
dl_gil. bat	*for Gilbarco*
dl_dw.bat	*for Wayne/Dresser*
dl_tok.bat	*for Tokheim*
dl_sam.bat	*for Schlumberger*
dl_krs.bat	*for Kraus*
dl_ben.bat	*for Bennett*
dl_gen.bat	*for generic dispensers*

The download feature also allows different dispenser and card reader types to be loaded into the same controller. For example, a site may have Gilbarco dispensers on one island and Tokheim dispensers on another. The Gilbarco dispenser would be loaded into bank 3 and the Tokheim dispenser into bank 5. If these dispensers have card readers, the files would be loaded into bank 4 for Gilbarco and bank 6 for Tokheim. The files may be loaded in any order to accommodate the specific requirements of the user.

Diagnostics

PCXZ General Diagnostics

Due to the complex and hazardous nature of servicing dispensing control systems, you should contact your POS dealer/distributer for technical support. They are responsible for first level of support on their products.

Dispensers and other fuel handling equipment should always be installed and serviced by a certified dispenser mechanic. This type of equipment is extremely hazardous if not handled properly.

On the following pages are some typical oversights or problems which may prevent proper operation with the PCXZ, regardless of the brand of dispenser/card reader. While dispensers vary drastically from brand to brand and model to model, there are issues common to all dispensers. Before proceeding to the troubleshooting steps for your particular brand of dispenser, go through this checklist.

For additional diagnostic tools, visit our web site at www.pie-corp.com

General Testing Procedures

✓ CHECK IT OUT!

- ✓ Are dispenser/reader IDs set properly? Most brand dispensers and their card readers must have unique numbers — the dispenser/reader ID — set to identify each individual dispenser/reader. A common problem occurs when the ID for a dispenser/reader is set the same as for another dispenser/reader. Also, on new dispensers/readers, the manufacturer usually sets IDs to a default value. If they are not changed, then all dispensers/readers will try to answer at the same time, causing communications errors.

- ✓ Are cable connections secure? Check all cables from POS to dispensers/readers to ensure that the connections are secure before applying power to any equipment. Crossed wiring for both power and communications can cause erroneous operation as well as possible damage to system components.

- ✓ Is the dispenser in manual override mode? Dispensers may be put in a manual override mode to allow the dispenser to operate as if no control system is connected to it. The dispenser in manual is capable of dispensing any time the handle is lifted off-hook. A dispenser in manual mode will not operate correctly with a controller such as the PCXZ. For operation with the PCXZ, be sure dispenser is in console control mode.

- ✓ Have you run PIE's diagnostics? Often when a dispenser/reader site is being upgraded with a POS using our PCXZ, the dispensers and readers may have existing problems keeping them from performing 100%. Don't assume all problems during a POS start-up installation are POS related. PIE supplies two simple diagnostic tools to help determine the location of the problem — 1) PCC Demo Test Program, an external software utility, and 2) PCXZ built-in diagnostic functions, accessed through the diagnostic port. ***See Dispenser Control Center Demo Test Program and PCXZ Internal Diagnostics at the beginning of this section.***

- ✓ Have dispensers/readers been initialized correctly? Some dispensers/readers behave erratically when power-cycled during an installation or upgrade. You may need to power down the dispensers/readers, wait 30 seconds, then power up the dispensers/readers to initialize them correctly.

- ✓ Have counter-balances been implemented to identify erroneous hose totals? Some dispensers may return erroneous hose totals or even no totals at all. It is recommended that the POS application software generate its own running totals in addition to the dispenser polled totals in case there are problems of this nature.

- ✓ Have new dispenser/reader batteries been installed? Dispensers/readers have a battery backup system to allow them to retain setup information in case of a power failure. Unfortunately the batteries in the dispenser are rarely replaced and therefore setup information, such as dispenser/reader IDs, are lost during a power glitch. Many problems can result from dead batteries, including the two immediately preceding this one.

- ✓ Is there fuel in all tanks? Are leak detectors falsely tripping? Make sure that there is fuel in the tanks at the site for all products. Also, leak detectors on the submersible dispenser can falsely trip, causing the dispenser to dispenser slowly or not at all. These two hydraulic problems occur more frequently than one would believe. It always pays to check the obvious.

- ✓ Have circuit breakers been tripped or turned off? There are many circuit breakers at a fueling site that control power to all the components of the dispensing system — POS, controllers, DBoxes, dispensers/readers, submersible dispenser, etc. If any of these breakers are tripped or turned off, the performance of the entire dispensing system is affected. Furthermore, these breakers may be located in different places throughout the facility.

- ✓ Have you tested, using a step-by-step approach? The startup of a new installation can present all kinds of problems that exhibit seemingly illogical situations. Multiple, layered problems may exist, complicating the diagnosis. At this point it is wise to try to work with a small portion of the site equipment, get that running correctly, then add additional equipment to the overall system, step by step. As an example of this approach, try running only one dispenser (such as dispenser ID 1) with the PCXZ controller and the PCC DEMO program. Once this step has been completed successfully, continue to put additional dispensers in the system. After all dispensers are responding correctly using this setup, exit the PCC DEMO program and bring the POS application online. This approach will provide a way to determine which problems exist and where they are located.

Preparation for Tech Support Calls

Should you require assistance from PIE regarding a problem with the PCXZ controller, be sure to have the following information ready. This information is necessary in resolving controller-related problems. ***PIE's operating hours are Monday through Friday, 8:00 - 5:00 EST.***

- ❑ Is this a new installation or an existing site? If dealing with an existing site, how old?
- ❑ Brand of dispensers and readers.
- ❑ Model numbers of all dispensers and readers.
- ❑ Number of dispensers and readers.
- ❑ Model numbers of distribution boxes (DBoxes).
- ❑ If site layout is complex, draw a site layout diagram labeling individual components and fax to PIE for reference (919 821-1325).
- ❑ Version of software in the dispensers, card readers, and PIE controller.
- ❑ Frequency of problem — does it happen once a day or on all transactions, on one dispenser or all dispensers, etc.
- ❑ Find out if the problem with the dispenser/readers can be correlated with an event such as a loss of power, a lightning storm, a dispenser/reader repair/servicing, a software upgrade to one of the system components, etc.
- ❑ Results of running the PIE supplied test utilities such as PCC DEMO.
- ❑ Results of diagnostic port information on the PCXZ.

Diagnostics

Troubleshooting Procedures

Gilbarco Dispenser/CRIND

In addition to the general diagnostic procedures that should be employed when troubleshooting a fuel system, there are some unique considerations when working with Gilbarco dispensers and readers.

DBox Configuration. Gilbarco uses several electrical interfaces for communications to and from the dispenser, such as two-wire interface (TWI) and RS422. The distribution box must match the PIE configurator ordered for the system. Both the Gilbarco Universal DBox and PIE's DBox can be set up as either a TWI or RS422 box and can easily be changed in the field. ***Refer to the appropriate DBox manual for configuration information.***

TWI Current Level. Current level needs to be 45mA on Gilbarco DBoxes using TWI communication. The signal current is generated by the PIE configurator box. Occasionally this current level needs to be set to accommodate the Gilbarco DBox input circuitry. ***See Diagram: PCXZ Connector/Jumper Layout in the PCXZ Installation section of this manual for details on how to alter this setting in the PIE configurator box.***

Polarity Sensitivity. Gilbarco TWI communication is polarity sensitive. If the two loop wires connecting the PIE configurator box to the DBox are reversed polarity, they must be switched. Some Gilbarco DBoxes and PIE's DBox have reverse polarity LEDs to indicate this condition. If this occurs in a system that uses the PIE universal cable, unplug the cable, reverse ends and reconnect. The cable is designed to reverse polarity when switched end to end.

Configurator Board LED Indicator for Open Loop Condition. The PIE Gilbarco-style configurator board has an LED that will assist in determining if the TWI is open. If this LED remains on solid with prices sent to the PCXZ controller, then there is a possibility of an open loop condition. Check loop wiring between the PIE configurator and the DBox.

Blender Dispensers and Hose Numbering. Gilbarco blender dispensers use slightly different hose numbering systems than a standard MPD. A Gilbarco blender can have up to five product selections on a side, plus an optional single-product hose. The hose numbers returned by the dispenser can be modified by the dispenser option programming. To determine which hose numbers are returned for which product or dispenser, using PCC or your POS application, send prices for six hoses. Then test the dispenser by dispensing a small quantity of each product and note which hose number is returned at the end of the sale for each product. Below is an example of different ways a 3-product blender can be set up.

Example: Gilbarco Blender Hose Assignments	
3-Product Blender (Example 1)	3-Product Blender (Example 2)
product 1 -> hose 1	product 1 -> hose 1
product 2 -> hose 2	product 2 -> hose 3
product 3 -> hose 3	product 3 -> hose 5

Contact your Gilbarco representative for additional information on Gilbarco blenders.

Setting and checking current. To set or check current on the configurator with Gilbarco dispensers connected, follow these steps.

1. Disconnect power from the system. Disconnect POS cable from controller. Leave cable connected between the main controller and configurator box.

2. Remove cover from the configurator box (4x4 gold DBox connected to the DBox).

3. Disconnect harness associated with DB09 male connector from the configurator board.

4. Power system and, with multi-meter set for DC current, place (+) lead on pin 1 of connector on configurator board and (-) on pin 8 of connector on board.

5. Current reading should be approximately 45mA. If current is not close to 45mA, it may be adjusted. Using a small screwdriver, adjust potentiometer on the board until correct current is achieved.

6. Once current has been set, power the system down and reconnect all connections.

7. Apply power to system and continue normal operation.

Wayne/Dresser Dispenser/CAT

In addition to the general diagnostic procedures that should be employed when troubleshooting a fuel system, there are some unique considerations when working with Wayne/Dresser dispensers and readers.

Dispenser Computer Boards. Wayne/Dresser dispensers have different models of computer boards to run the dispenser operation. These boards are the SC82 and the Duplex (SC86). The SC82 is configured with dip switches, while the Duplex (SC86) is option-programmed. It is important to obtain both the dispenser configuration as well as the version of software running the dispenser.

Current Level of DBoxes. The communication current level of Wayne/Dresser DBoxes or PIE's DBox should be 35mA. This signal current is generated by the PIE configurator box. Occasionally this current level needs to be set to accommodate the Wayne DBox input circuitry. ***See Diagram: PCXZ Connector/Jumper Layout in the PCXZ Installation section of this manual for details on altering this setting in the PIE configurator box.***

Configurator Board LED Indicator for Open Loop Condition. The PIE Wayne/Dresser style configurator board has an LED that will assist in determining if the current loop is open. If this LED remains on solid with prices sent to the PCXZ controller, then there is a possibility of an open loop condition. Check loop wiring between the PIE configurator and the DBox. ***Refer to the appropriate DBox communication guide.***

Setting and checking current. To set or check current on the configurator with Wayne/Dresser dispensers connected, follow these steps.

1. Disconnect power from the system. Disconnect POS cable from controller. Leave cable connected between the main controller and configurator box.

2. Remove cover from the configurator box (4 x 4 gold DBox connected to the Wayne/Dresser).

3. Disconnect harness associated with DB09 male connector from the configurator board.

4. Power system and, with multi-meter set for DC current, place (+) lead on pin 1 of connector on configurator board and (-) on pin 8 of connector on board.

5. Current reading should be approximately 35mA. If current is not close to 35mA, it may be adjusted. Using a small screwdriver, adjust potentiometer on the board until correct current is achieved.

6. Once current has been set, power the system down and reconnect all connections.

7. Apply power to system and continue normal operation.

Tokheim Electronic Dispenser/CardScan

In addition to the general diagnostic procedures that should be employed when troubleshooting a fuel system, there are some unique considerations when working with Tokheim dispensers and readers.

Dispenser Communication Methods. The configurator box for the PCXZ system must match the Tokheim distribution box. Tokheim uses two communication methods to talk to their distribution boxes, RS422 and Tokheim proprietary. Below is a table describing which method is used by each DBox model number:

Tokheim Proprietary	→	67, 67A, M98, M94, 67B
RS422	→	67B

M98 and M94 DBoxes. If the Tokheim distribution box is an M98 or M94 power center, make sure all switches are turned on. This box has a power switch and a manual override switch for each dispenser position. It also has master power switches on the outside and inside of the box. Both must be on for correct operation.

Dispenser IDs. The M98 and M94 boxes are only capable of running up to 8 dispensers (fueling positions). The dispenser IDs are determined by the control board position to which the dispenser is wired. Jumper settings in these boxes allow selection of box IDs of 1→ 8 or 9 → 16. If the setting is incorrect, the DBox will not correctly answer commands issued by the PCXZ controller. No dispenser polled totals are reported for the M98 and M94 DBoxes.

67 Series DBoxes. The 67 series distribution box has a power switch on the outside of the box. It must be on to allow communications to the dispenser. This box has multiple dispenser wiring positions which are not dispenser ID related. Dispensers can be wired into any position in this box and hence may be moved from position to position to isolate communication problems.

Configuration of 67 Series DBoxes. The 67B series distribution box can be configured for RS422 and Tokheim proprietary communications. Reference the Tokheim 67B DBox manual 67B Interface Box Installation Guide Form 5115 for help in determining configuration of the 67B DBox. The PIE configurator type has to match the 67B DBox configuration for correct operation.

Configurator Board Communication LED Indicator. The PIE configurators (RS422 and Tokheim proprietary) have LEDs to help diagnose communications problems. There are transmit (Txd) and receive (Rxd) LEDs on the PIE configurator board which indicate if the PCXZ controller is transmitting to the Tokheim DBox or if the Tokheim DBox is trying to talk to the PCXZ.

Tokheim Proprietary Configurator Board Power Control Relay LED Indicator. The Tokheim proprietary configurator board has a control (Ctrl) LED to indicate the status of the power control relay. If the LED is ON, the relay is energized. ***Power control relay may be overridden with the emergency relay, position H1 on the configurator board. See Diagram: Tokheim Configurator Board Emergency Relay Jumper in the Tokheim Dispenser section of this manual.***

Schlumberger Electronic Dispenser/SAM

In addition to the general diagnostic procedures that should be employed when troubleshooting a fuel system, there are some unique considerations when working with Schlumberger dispensers and readers.
Baud Rate Settings. The baud rate on the SAM interface box must match the baud rate set on the PIE RS232 configurator box. ***Standard is 4800 baud.***

Software for the SAM. The software in the SAM needs to be 4.17.

Software for the Dispensers. Software for the dispensers needs to be 130.04.03.

Dispenser Option Programming. The dispenser option programming must match the listing in the Schlumberger Installation section of this manual.

Configurator Diagnostics. The PIE configurator (RS232) has LEDs to help diagnose communications problems. There are transmit (Txd) and receive (Rxd) LEDs on the PIE configurator board that indicates if the PCXZ controller is transmitting to the Schlumberger DBox or if the Schlumberger DBox is trying to talk to the PCXZ.

Kraus Electronic Dispenser

In addition to the general diagnostic procedures that should be employed when troubleshooting a fuel system, there are some unique considerations when working with Kraus dispensers.

TTC and TTP Wiring. Make sure the TTC and TTP wires coming from the Kraus head are not reversed.

Wiring for Manual Operation. The Kraus head has a wire (#14) that is used to put the Kraus head in manual operation. This wire should not be tied to 110vac (hot), but should be capped off and unused.

Kraus Software Level. The software in the Kraus head needs to be of a certain level or above to work correctly with PIE controllers. Below are the Kraus models with their appropriate software levels:

Micon 100 w/ 152 board	ver 3.1
Micon 100 w/ 252 board	ver 6.30
Micon 100 w/ 463 board	ver 7.03
Micon 200	ver 1.09
Micon 300	ver 2.04
Micon 500	ver 1.33AN

Dispenser IDs. Dispenser IDs are not set in a Kraus dispenser head. The dispenser ID is derived from the position the dispenser is wired into on the PIE configurator board.

Diagnostic LEDs. The PIE configurator (Kraus) has LEDs to help diagnose communications problems. There are transmit (Txd), receive (Rxd) and control (Ctrl) LEDs on the PIE configurator board that indicate if the PCXZ controller is transmitting to the Kraus head or if the Kraus head is trying to talk to the PCXZ.

Bennett Electronic Dispenser

In addition to the general diagnostic procedures that should be employed when troubleshooting a fuel system, there are some unique considerations when working with Bennett dispensers.

Settings. Make sure the enable switches on the PIE Bennett configurator board are set correctly for the dispensers that exist. If switches are turned on for dispensers that don't exist, communications to the other dispensers will not work.

Polarity. Observe the polarity of the communication wires from the Bennett dispenser. If these wires are reversed, dispenser communication will not work at all.

Dispenser IDs. Dispenser IDs are not set in a Bennett dispenser. The dispenser ID is derived from the position the dispenser is wired into on the PIE configurator board.

Diagnostic LEDs. The PIE configurator (Bennett) has LEDs to help diagnose communications problems. There are transmit (Txd), receive (Rxd) and control (Ctrl) LEDs on the PIE configurator board that indicate if the PCXZ controller is transmitting to the Bennett head or if the Bennett head is trying to talk to the PCXZ.